Finest Quality

Union Special®

Industrial Sewing Equipment

Automated Systems Division

2800SBH9C
16" 406 SLEEVE HEMMER
WITH PICK STACKER
CATALOG
01/2004

INCLUDES:

PARTS MANUAL
TECHNICAL MANUAL
SAFETY MANUAL

Union Special Corporation
Automated Systems Division

From the library of: Diamond Needle Corp

From the library of: Diamond Needle Corp

2800SBH9C

SLEEVE HEMMER

TO AID IN IDENTIFING THIS CATALOG, CUT OUT THE LABEL ABOVE AND INSERT BEHIND THE CLEAR PLASTIC COVER OF THIS BINDER

From the library of: Diamond Needle Corp

From the library of: Diamond Needle Corp

PARTS MANUAL
TABLE OF CONTENTS

Union Special Warranty P-1
Recommended Spare Parts List P-3
General Information P-5

SUB-ASSEMBLIES:

2884K1C	FRAME ASSEMBLY	P-6
2884K4A	PICK-UP JAW ASSEMBLY	P-8
2884K5A	PICK-UP BLADE ASSEMBLY	P-10
2884K6A	BELT IDLER LOADING END ASSEMBLY	P-12
2884K6B	BELT IDLER STACKING END ASSEMBLY	P-13
2884K7B	RECIPROCATING. TRIM KNIFE ASSEMBLY	P-14
2884AA13	FOLDER ASSEMBLY	P-17
2884AA26	HEMMER FOLDER DRIVE ASSEMBLY	P-18
2884K12B	OIL PUMP, MOTOR, & COOLER	P-21
2884K14	FLAPPER ASSEMBLY	P-22
2884K15	STACKER TRAY ASSEMBLY	P-23
2884K16C	PNEUMATIC PANEL ASSEMBLY	P-24
2884K17A	MANUAL PUSH BUTTON. ASSEMBLY	P-28
2884K21B	CONTROL BOX ASSEMBLY	P-29
2884K22B	POWER SUPPLY BOX ASSEMBLY	P-35
2884AD10	CHAIN PULLER ASSEMBLY	P-37
2884K25B	PACK & SHIP ASSEMBLY	P-39
2884AD12	FLAT BED CHAIN CUTTER ASSEMBLY	P-40
2884K30B	MOTOR ASSEMBLY	P-43
2884N4 CONTROL DISPLAY		P-44

LOOSE PARTS

OPER. #:

030	BELT & TABLEBOARD ASSY'	P-47
040	CONVEYOR DRIVE LOOSE PARTS	P-50
070	CONVEYOR LOOSE PARTS	P-51
240	ELECTRICAL LOOSE PARTS	P-52
250	COVERS & WASTE LOOSE PARTS	P-54
670B156	THREAD BREAK SENSOR & ADJ. INSTRUCTIONS	P-55

FS322H90-2C48 SEWING HEAD MANUAL

FS322 SEWING HEAD CATALOG P-70

TECHINICAL MANUAL T-1

SAFETY MANUAL

TIMING DIAGRAMS & ELECTRICAL BLUEPRINTS

From the library of: Diamond Needle Corp

From the library of: Diamond Needle Corp

RECOMMENDED SPARE PARTS LIST - 2800SBH9C

QUANTITIES ARE BASED ON USAGE FOR 5 HEMMERS

Part Number	Description	Qty
121GJS75/029	Needles	200
50657	Cast-Off Plate Assembly	2
50304L	Cast-Off Finger	2
50325AF	Rear Needle Guard Holder	1
50325AE	Rear Needle Guard	1
50393HK	Oil Screen Felt	2
AS60-1691	Main Feed Dog	5
50309F	Looper	5
34725	Needle Guard Front	1
AS60-1675	Differential Feed Dog	5
****	Throat Plate	2
****+	Presser Foot	2

**** See Sewing Combinations Pages 58 - 63

COMMON PARTS

Part Number	Description	Qty.
AS47-1184	Reflective Tape	5
671-109A	4 Way Mac Valve	1
660-912A	Connecting Link for the Chain	2
660-912V	Roller Chain #35 - 74 Pitches	2
670H97	Oil Pump Motor	1
671-103A	4 Way Solenoid Valve	3
671D10	Air Pressure Gauge	5
671D15	Air Pressure Gauge (0-60)	2

PICKUP BLADE AREA

Part Number	Description	Qty.
661-68B	Compression Spring	5
671A146-1	Air Cylinder	2
AS47-658	Jaw Autuator	2
AS72-40	Pickup Fingers w/o Pins	10
AS72-41	Pickup Fingers with Pins	5
AS72-43	Pickup Fingers 2-3/8 Wide	5

AIR KLIPP AREA

Part Number	Description	Qty
671A232	Air Cylinder	2
AS72-885	Modified Air Klipp	2
22716A	Screw	15
99373C	Screw	15
AS47-529	Inlet	5
AS72-884	Upper Knife	10
AS47-590	Lower Knife	10

From the library of: Diamond Needle Corp

From the library of: Diamond Needle Corp

CHAIN PULLER AREA

Part Number	Description	Qty
671A212	Air Cylinder	2
AS72-866	Chain Puller Roller	2
C50042AK	Timing Belt	3
RM3557-25	Timing Belt	3

TRIM KNIFE AREA

Part Number	Description	Qty
34770AH	Upper Knife	5
34749AH	Lower Knife	5
34771	Upper Knife Arm	2
95435	Screw for 34771	3
660-866G	Rod End	2

FOLDER DRIVE AREA

Part Number	Description	Qty
670B177	Photocell	2
670H92B	Stepping Motor	1
RM3557-21	Timing Belt	3
RM3557-20	Timing Belt	3

ELECTRICAL

Part Number	Description	Qty
RM6448	PCB for Push Buttons	1
RM6436	Main CPU Board	2
670F69	15 Amp Fuse	5
RM6427	Stepper Driver	1
RM6442	Lower Looper Thread Break	1
RM6528	Looper Thread Break Assy	2
670B178	Photocell - Straight	2
670H153A	Stpper Motor, 3 Amp	1
670B188A	Photocell w/Ext. 13" leads	2
670H165A	StepperMotor, 1.5 amp	1

From the library of: Diamond Needle Corp

From the library of: Diamond Needle Corp

GENERAL INFORMATION
280SBH5C

PART NUMBER	DESCRIPTION:	WHERE USED:
PCB'S:		
RM6251A	P.C.B. ASM, AS87 EMI TERM. CPU	CONTROL DISPLAY: ASSY. NO. 2884N4
RM6254	KEYBOARD P.C.B. ASSEMBLY	CONTROL DISPLAY: ASSY. NO. 2884N4
RM6287	SHARP LCD ASSEMBLY	CONTROL DISPLAY: ASSY. NO. 2884N4
RM6412	ASM. P.C.B. UNICON E-STOP	CONTROL BOX ASSEMBLY
RM6414	ASM. P.C.B UNICON 8-INPUT	(OPER.230) ELECTRICAL LOOSE PARTS
RM6436	ASM. P.C.B. UNICON MAXI CPU	CONTROL BOX ASSEMBLY
RM6447	DRIVER ASSY.	CONTROL BOX ASSEMBLY
RM6448	ASSY.- P.C.B. MANUAL P.B.	MANUAL PUSH BUTTON ASSY.
RM6489	GASKET, EMI COPPER FINGERS	CONTROL DISPLAY
RM6602	P.C.B. ASM. LOOPER T.B. VER2	ELECTRICAL LOOSE PARTS
SENSORS:		
670B 188A	PHOTO ELECT. SENSOR	FOLDER DRIVE ASSEMBLY
670B 188A	PHOTO SENSOR	PICK STACKER ASSEMBLY
670B 178	PHOTO ELECT. 18MM-STRT SENSOR	PICK STACKER ASSEMBLY
BELTS:		
661-185-1	CONY. BELT STRETCH ENDLESS (w.1.000x172.875)	CONVEYOR
661-185-2	CONV.13ELT STRETCH ENDLESS (w. 1.000x59.250)	CONVEYOR
661-185-11	CONY. BELT STRETCH ENDLESS (w..688 X 67LG)	CONVEYOR
661-186-1	CONY. BELT STRETCH ENDLESS (w. .688x 197.438)	CONVEYOR
RM3557-40	TIMING BELT 207 X L037	FOLDER DRIVE ASSEMBLY
RM3557-21	TIMING BELT 212 X L037	FOLDER DRIVE ASSEMBLY
RM3557-38	TIMING BELT	CHAIN PULLER: 2884AD10
RN/13656-19	30" V-BELT 3/8 W. 3L	MOTOR ASSEMBLY: 2884K30B
AS72-37	TABLEBOARD BELT	
MOTORS:		
670H153A	STEPPER MOTOR 3A WITH CABLE	COMMON PARTS
670H163	AC TRIM KNIFE MOTOR	TRIM KNIFE ASSEMBLY: 2884K7B
670H168	CLUTCH MOTOR	MOTOR ASSEMBLY: 2884K28B
670H9184A	STEPPER MOTOR, 3A WITH CABLE	FOLDER DRIVE ASSY: 2884KAA26
LAMP AND BULB:		
RM6187-4	HOLOGEN, W/BASE, 220VAC	670J25- REPLACEMENT BULB
FUSES:		
670H69G	FUSE, CLASS CC 7AMP	POWER SUPPLY BOX ASSY.

From the library of: Diamond Needle Corp

REPORT DATE 7/19/95 BILL OF MATERIAL

PARENT NUMBER: 2884K1C DESCRIPTION: ASSEMBLY, FRAME S8H5C

SEQ NO.	COMPONENT	QUANTITY PER	DESCRIPTION
010	22652E20	54.	SCREW
010	661-184-1	68.	WELD NUT, SINGLE 5/16-18
010	AS47-229CC	68.	WASHER, .375 ID, .625 OD, .025
010	AS72-131-1	4.	1-1/2 X 1-1/2 END CAP
010	AS72-96	54.	FASTENER, FRAME ANCHOR
010	AS73-903-3	8.	5/16-18 HALF ROUND NUT
010	RM8020-24	2.	EXT. 8020 TYPE 1 X 88.500 LG.
010	RM8020-26	6.	EXT. 8020 TYPE 2 X 24.438 LG.
010	RM8020-27	2.	EXT. 8020 TYPE 3 X 47.00 LG.
010	RM8020-28	1.	EXT. 8020 TYPE 3 X 37.000 LG.
010	RM8020-29	1.	EXT. 8020 TYPE 3 X 18.938 LG.
010	RM8020-30	6.	EXT. 8020 TYPE 3 X 21.00 LG.

LOOSE PARTS:

OPER	QTY.	PART NO.	DESCRIPTION
010	12	22642K54	CAP SCREW
010	52	22652E20	N/SCREW
010	4	22653B8	N/SCREW
010	2	660-1000	N/ISOLATOR,CL.PLATE
010	6	660-999A	SWIVEL CASTER
010	6	661-126-1	FOOT, LEVELING - 3/8-16
010	98	661-184-1	WELD NUT, SINGLE 5/16-18
010	98	AS47-229CC	WASHER, .375 ID, .625 OD
010	4	AS72-131-1	1-1/2 X 1-1/2 END CAP/BU
010	6	AS72-89A	BRKT., CASTER
010	52	AS72-96	FASTENER, FRAME ANCHOR
010	4	AS73-903-1	10-32 HALF ROUND NUT
010	8	AS73-903-3	5/16-18 HALF ROUND NUT
010	50	6-163-16	8020 EXTRUSION 1-1/2X1-1
010	6	RM3211-13	N/HEX JAM NUT
010	12	RM3293-2	5/16 F.W.
010	6	RM3293-4	1/2 F.W.
010	4	RM3293-6	#10 F.W.
010	6	RM3993-2	N/SPRING WASHER
010	4	RM3993-3	#10 H.S.L.W.
010	12	RM3993-5	5/16 H.S.L.W.
010	6	RM4551-1	PAD, RUBBER-LEVELING FOOT
010	1	AS60-1829	PLATE, FS HEAD MOUNT

From the library of: Diamond Needle Corp

2884K1C
FRAME ASSEMBLY

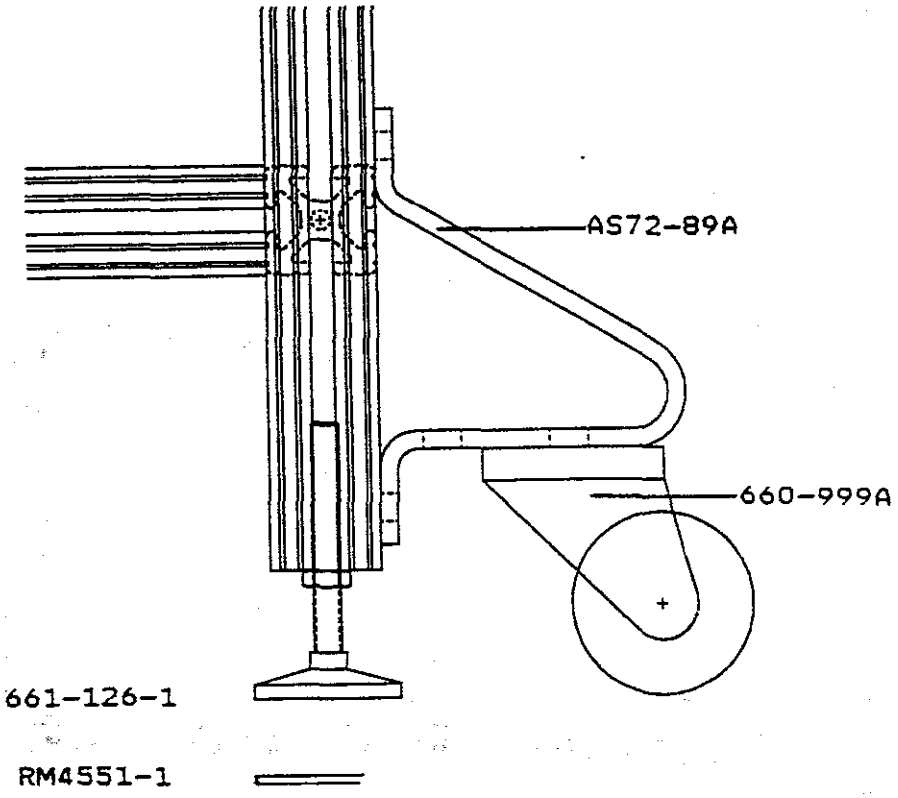

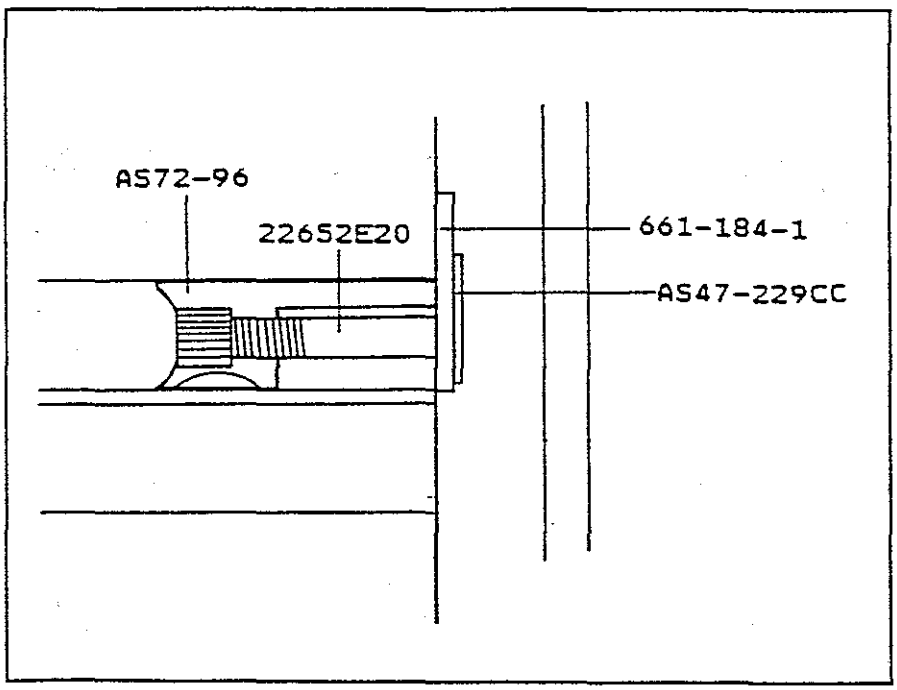

From the library of: Diamond Needle Corp

PARENT NUMBER: 2884K4A DESCRIPTION: ASSEMBLY, PICKUP JAW

SEQ NO.	COMPONENT	QUANTITY PER	DESCRIPTION
050	22652A6	2.	#8-32 X 3/8 H.S.H.C.S.
050	22652A8	2.	#8-32 X 1/2 H.S.H.C.S.
050	22652B6	4.	#10-24 X 3/8 H.S.H.C.S. ALLOY
050	22652J10	2.	#6-32 X 5/8" H.S.H.C.S.
050	22652J6	2.	#6-32 X 3/8" H.S.H.C.S.
050	660-219A	4.	ROLL PIN .125 DIA. X .500 LG.
050	660-985A	1.	BALL
050	661-68B	1.	COMPRESSION SPRING
050	671A146-1	1.	CYLINDER,AIR 3/4B-1/2 S-TYPE D
050	671F82C	2.	5/32" X 1/8 NPT KQL MALE ELBOW
050	AS47-17	1.	BALL CAP B
050	AS47-21	1.	BALL CAP A
050	AS47-244	1.	END PLATE
050	AS47-301	1.	PINCHER END PLATE, BACK
050	AS47-656	1.	ECCENTRIC COLLAR
050	AS47-657	1.	PIVOT BLOCK
050	AS47-658	1.	JAW ACTUATOR
050	AS47-659	1.	JAW "A" (FACTORY USE ONLY)
050	AS47-660	1.	JAW "B" (FACTORY USE ONLY)
050	AS47-701	1.	PLUNGER
050	AS47-793	1.	DISC
050	AS47-794	1.	SPRING RETAINER
050	AS72-152	1.	BLOWER-LEAD IN-PICKUP JAW
050	AS72-45	1.	BRACKET, CYLINDER
050	AS72-719	1.	BLOCK, SUPPORT
050	AS72-727	1.	BAR, TOP - JAW
050	AS72-728	1.	BRACKET, SUPPORT - JAW
050	AS72-91	1.	COVER, PICK-UP BLADE
050	RM2797-2	4.	1/4-20 X 5/8 H.S.H.C.S.
050	RM3162-11	1.	1/4-20 X3/8 H.H.C.S.
050	RM3293-1	5.	1/4 F.W.
050	RM3293-5	4.	#8 F.W.
050	RM3293-6	4.	#10 F.W.
050	RM3993-3	6.	#10 H.S.L.W.
050	RM3993-4	4.	#8 H.S.L.W.
050	RM3993-8	5.	1/4 H.S.L.W.
050	RM4385-2	2.	#10-32 X 1/4 H.S.S.S.OVL PW/LW
050	RM4623-1	4.	SLHCS - 1/4-20 X 1/2

From the library of: Diamond Needle Corp

2884K4A PICK-UP JAW ASSEMBLY

* Cannot be ordered separately.
This is a fitted assembly ONLY.

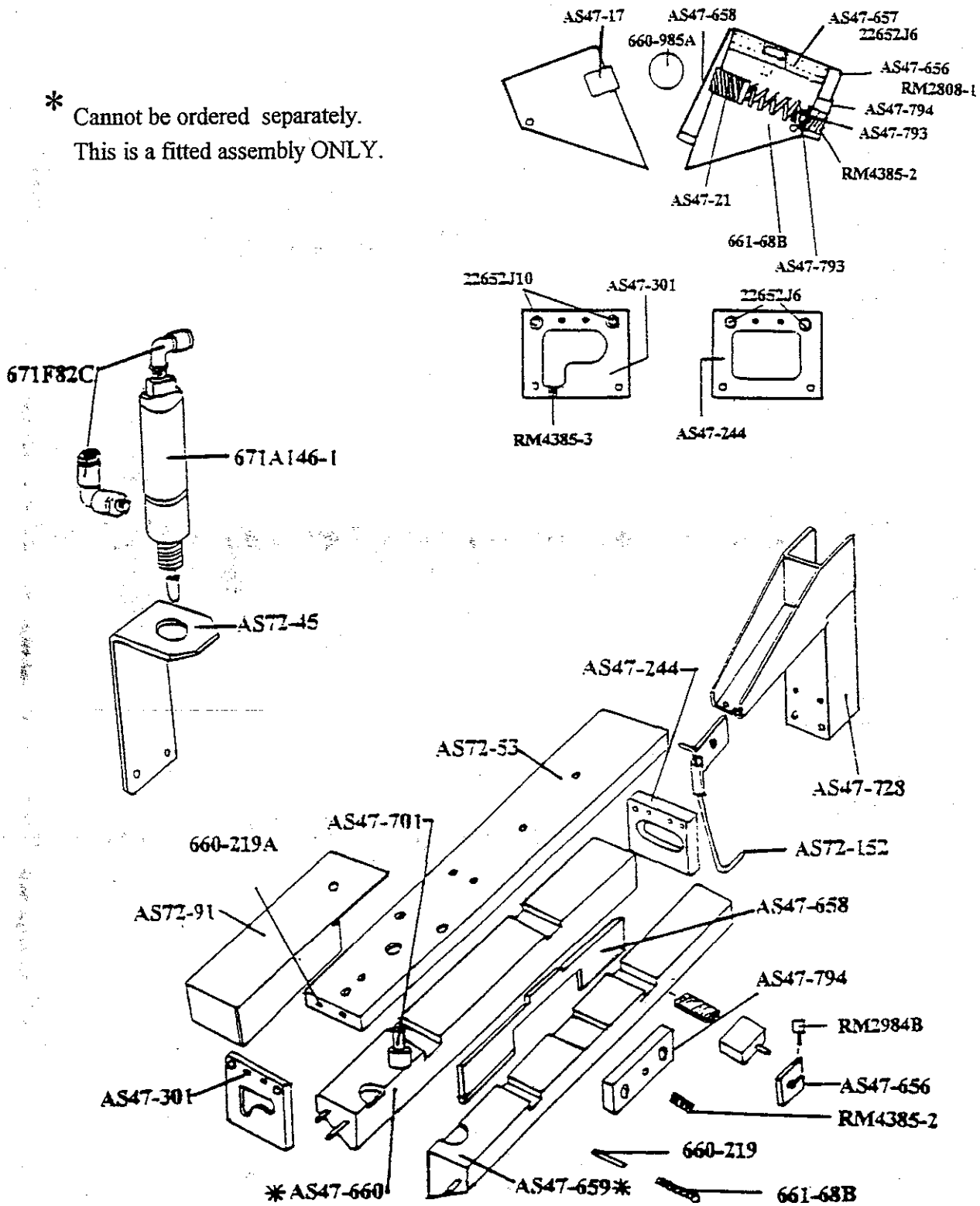

From the library of: Diamond Needle Corp

PARENT NUMBER: 2884K5A DESCRIPTION: ASSEMBLY, PICKUP BLADE

SEQ NO.	COMPONENT	QUANTITY PER	DESCRIPTION
010	AS72-43	1.	FINGER - PICKUP 2-3/8"
060	22653B8	2.	#10-32 X 1/2 H.S.H.C.S. 28D3
060	671-102	2.	FLOW CONTROL VALVE
060	671A145-1	1.	AIR CYLNDR 3/4 B-3'S TYPE DXDE
060	AS4-324	1.	CYLINDER STOP
060	AS47-383	2.	WSHR, ISO-.250ID,.750OD,.125TK
060	AS72-33	1.	COLLAR PIVOT
060	AS72-38	1.	CLEVIS - FINGER BAR
060	AS72-40	3.	FINGER-PICKUP-1/2 W/O PINS
060	AS72-41	2.	FINGER-PICKUP 1/2
060	AS72-717	1.	STOP, CYLINDER - PICK-UP BLADE
060	AS72-723	1.	BAR, MOUNTING - FINGER
060	RM3068D	2.	.265 I.D.F.W.(.125 THK)
060	RM3211-1	1.	1/4-28 HEX JAM NUT
060	RM3293-6	2.	#10 F.W.
060	RM3993-3	2.	#10 H.S.L.W.
060	RM4379-1	14.	#8-32 X 3/8 H.S.FL.H.C.S.

LOOSE PARTS:

	22652J8	12.	#6-32 X 1/2" H.S.H.C.S.
060	660-775H	2.	WELDNUT,DBL.1/4-20-1.000 CNTRS
060	AS47-229AU	4.	.33 X .87 X .09 LG. SPACER
060	AS72-30	1.	BRACKET - PIVOT (R.H.)
060	AS72-31	1.	BRACKET, PIVOT (L.H.)
060	AS72-32	6.	SPACER - PIVOT BRACKET
060	AS72-44	12.	GUIDE - FINGER
060	RM3162-9	4.	1/4-20 X 2 1/2 H.H.C.S.
060	RM3293-1	4.	1/4 F.W.
060	RM3293-7	12.	#6 FLAT WASHER
060	RM3993-6	12.	#6 H.S.L.W.
060	RM3993-8	4.	1/4 H.S.L.W.

From the library of: Diamond Needle Corp

#2884K5A PICK-UP BLADE ASSEMBLY

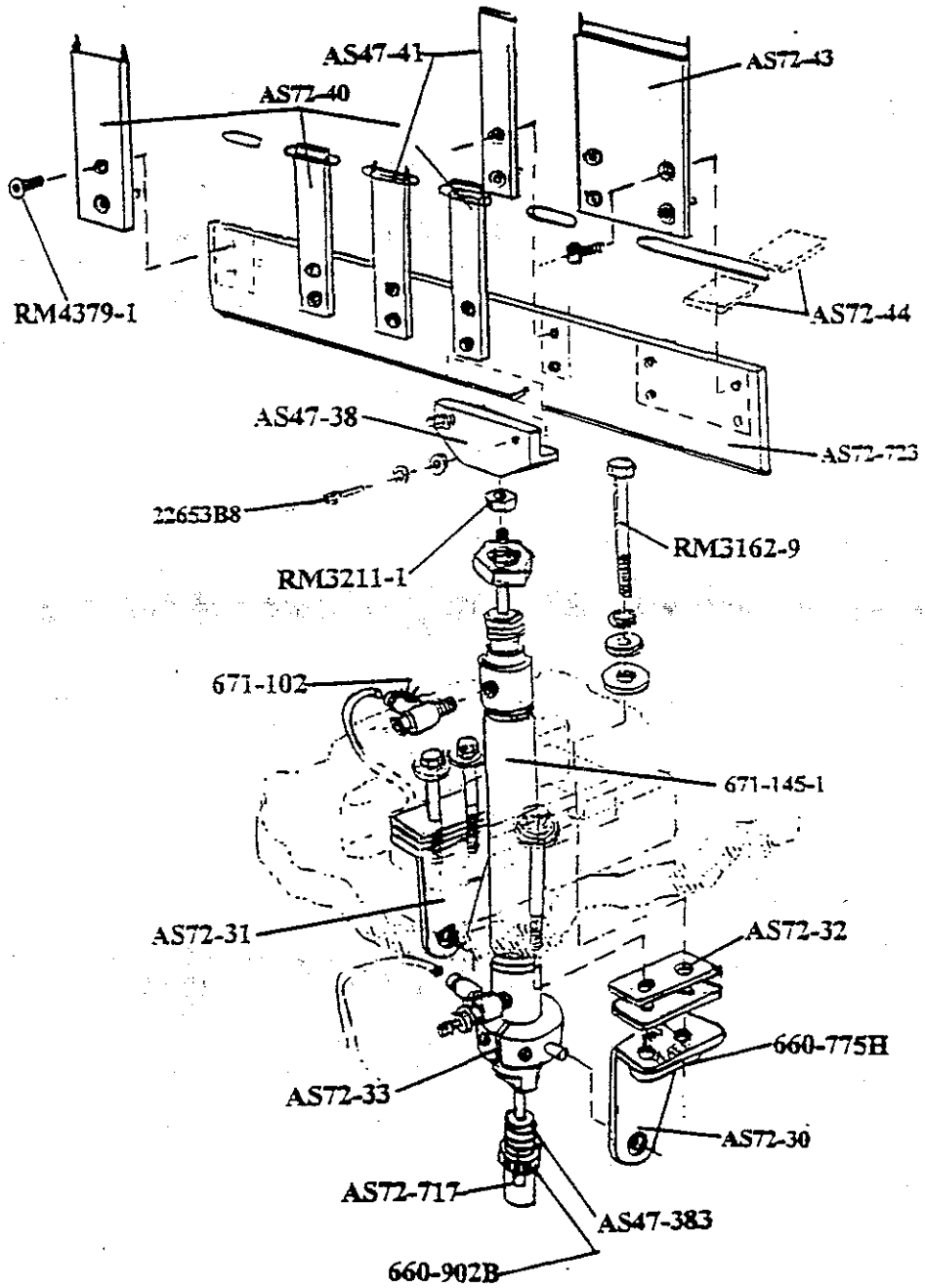

From the library of: Diamond Needle Corp

PARENT NUMBER: 2884K6A DESCRIPTION: ASSY-BELT IDLER-LOADING END

SEQ NO.	COMPONENT	QUANTITY PER	DESCRIPTION
010	22652D40	2.	SOC HD CAPSCR
010	652J16	1.	WASHER
010	661-188-1	4.	BEARING, FLANGETTE 1/2 BORE
010	AS72-119	1.	BRACKET, IDLER
010	AS72-120	2.	IDLER, SHAFT
010	AS72-121-1	4.	ROLLER, IDLER .844 WD
010	AS72-121-2	8.	ROLLER, IDLER 1.156 WD
010	AS72-165	1.	SPACER, IDLER BRACKET
010	AS72-169	1.	WASHER, MODIFIED
010	RM2791-3	8.	1/4-20 HEX NUT
010	RM3162-2	10.	1/4-20 X 3/4 H.H.C.S.
010	RM3293-1	20.	1/4 F.W.
010	RM3993-8	8.	1/4 H.S.L.W.
010	RM4534-3	24.	SSCP - 1/4-20X3/16

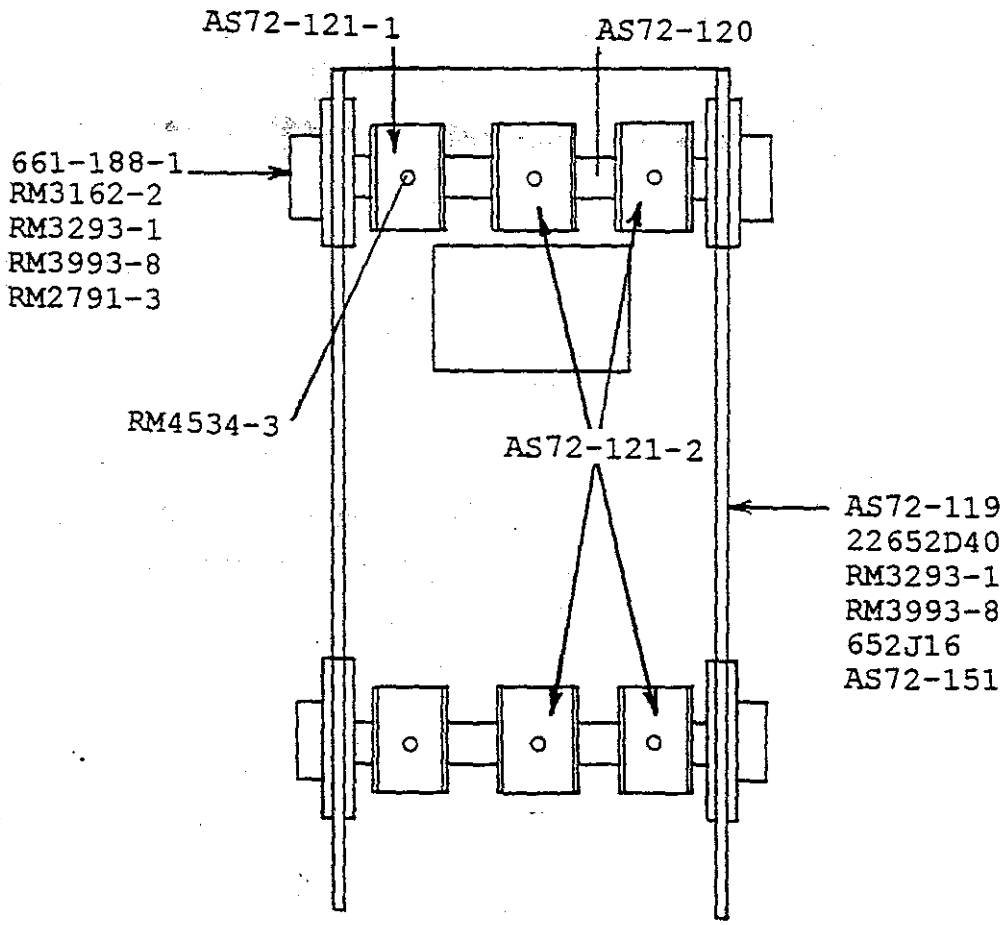

From the library of: Diamond Needle Corp

PARENT NUMBER: 2884K6B DESCRIPTION: ASSY-BELT IDLER-STACKER END

SEQ NO.	COMPONENT	QUANTITY PER	DESCRIPTION
010	22652D40	2.	SOC HD CAPSCR
010	652J16	4.	WASHER
010	661-188-1	4.	BEARING, FLANGETTE 1/2 BORE
010	AS72-119	1.	BRACKET, IDLER
010	AS72-120	2.	IDLER, SHAFT
010	AS72-121-1	4.	ROLLER, IDLER .844 WD
010	AS72-121-2	8.	ROLLER, IDLER 1.156 WD
010	AS72-151	1.	PLATE, NUT 1-3/4 CENTERS
010	RM2791-3	8.	1/4-20 HEX NUT
010	RM3162-2	8.	1/4-20 X 3/4 H.H.C.S.
010	RM3293-1	18.	1/4 F.W.
010	RM3993-8	6.	1/4 H.S.L.W.
010	RM4534-3	24.	SSCP - 1/4-20X3/16

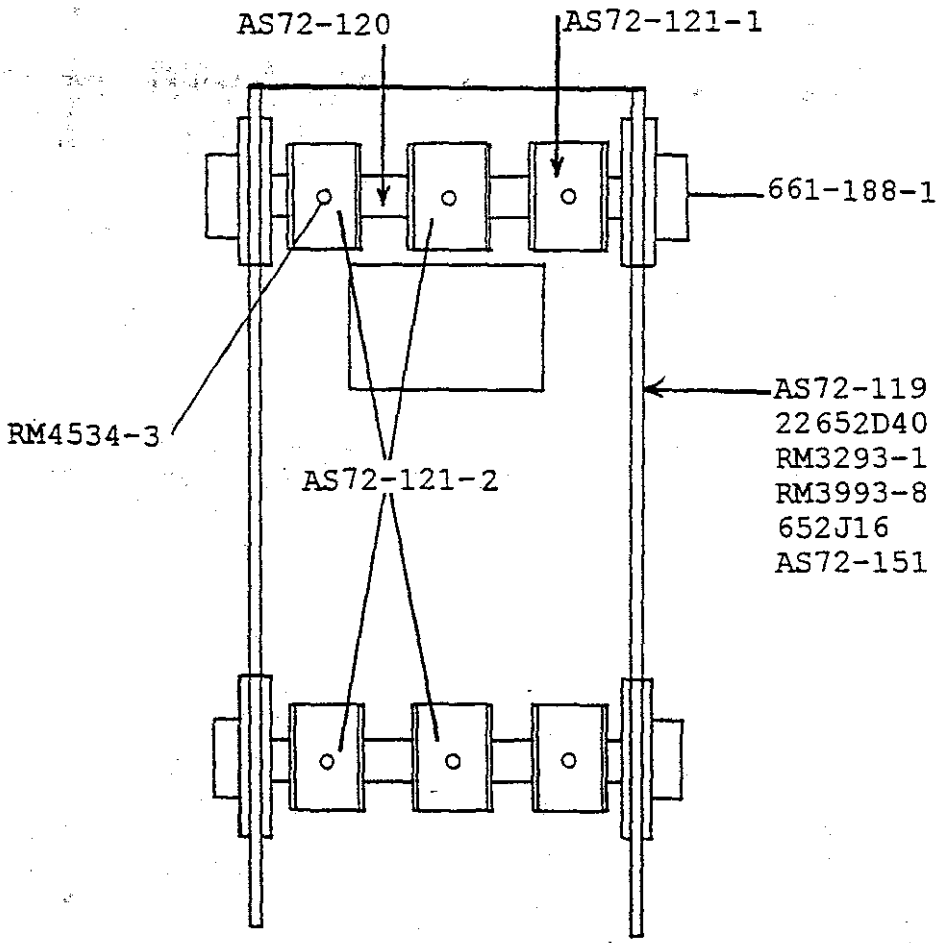

From the library of: Diamond Needle Corp

PARENT NUMBER: 2884K7B DESCRIPTION: TRIM KNIFE ASSEMBLY

SEQ NO.	COMPONENT	QUANTITY PER	DESCRIPTION
010	22652B14	2.	#10-24 X 7/8 H.S.H.C.S.
010	AS72-894	1.	PAD, ISODAMP - TRIM MOTOR
010	AS72-895	1.	PAD, ISODAMP - KNIFE - INNER
010	AS72-896	1.	PAD, ISODAMP - KNIFE - OUTER
110	22650AA4	2.	HEX SOC CUP PT SET SCREW
110	22652B6	2.	#10-24 X 3/8 H.S.H.C.S. ALLOY
110	22652D12	6.	1/4-20 X 3/4 H.S.H.C.S.
110	22652D40	2.	SOC HD CAPSCR
110	22652J8	2.	#6-32 X 1/2" H.S.H.C.S.
110	22656D12	1.	1/4-20 X 3/4 H. S. F. H. C. S.
110	29924BA	1.	CUTTER ASSEMBLY
110	41358	2.	WASHER
110	660-866G	1.	ROD END - HARDENED 1/4
110	661-183	1.	BEARING, ROD END - BALL 15MM
110	670H163	1.	MOTOR, AC TRIM KNIFE CABLE ASM
110	671-113A	3.	FLOW CONTROL
110	671F82F	3.	FITTING, PUSH IN 5/32" TUBE
110	671F82G	3.	MALE CONNECTOR
110	AS47-229AU	4.	.33 X .87 X .09 LG. SPACER
110	AS60-1205	1.	BRACKET, MOTOR
110	AS60-1211	1.	BRACKET, RECIPROCATING KNIFE
110	AS60-175	2.	SCREW, SPECIAL #4-40 X 1-3/4
110	AS60-199	1.	CLEVIS, KNIFE
110	AS60-201	2.	ADAPTER, ROD END
110	AS60-202	1.	PLATE, CLOTH - CUTTER
110	AS60-203	1.	PLATE, RETAINER TIE ROD
110	AS60-204	1.	ECCENTRIC, TRIM KNIFE
110	AS60-208	1.	WASHER, COUNTERSUNK 1/4
110	AS60-209	1.	SCREW, ADJUSTING
110	AS60-210	1.	BLOCK, ADJUSTING SCREW
110	AS60-358	1.	PLATE, MOUNTING - SBLT
110	AS60-359	1.	BLOCK, SUCTION
110	AS60-361A	1.	SPACER - SBH KNIFE
110	AS60-362	1.	SLIDE, BALL - MODIFIED
110	AS60-369A	1.	GUARD, TRIM KNIFE
110	AS72-168	1.	BRACKET, FLOW CONTROL
110	RM2791-1	4.	#8-32 HEX NUT
110	RM2791-3	1.	1/4-20 HEX NUT
110	RM2984B	2.	#4-40 X 3/8 H.S.H.C.S.
110	RM3211-1	1.	1/4-28 HEX JAM NUT
110	RM3293-1	5.	1/4 F.W.
110	RM3293-2	2.	5/16 F.W.
110	RM3293-5	4.	#8 F.W.
110	RM3293-6	4.	#10 F.W.
110	RM3293-7	2.	#6 FLAT WASHER
110	RM3306-3	1.	#10-32 X 3/8 H.S.H.C.S.
110	RM3680-1	3.	#6-32 X 1/4 H.S.BUT.H.C.S.
110	RM3993-3	4.	#10 H.S.L.W.
110	RM3993-4	4.	#8 H.S.L.W.
110	RM3993-5	2.	5/16 H.S.L.W.
110	RM3993-6	2.	#6 H.S.L.W.

From the library of: Diamond Needle Corp

PARENT NUMBER: 2884K7B DESCRIPTION: TRIM KNIFE ASSEMBLY

SEQ NO.	COMPONENT	QUANTITY PER	DESCRIPTION
110	RM3993-7	2.	#4 H.S.L.W.
110	RM3993-8	5.	1/4 H.S.L.W.
110	RM4316-22	1.	SCREW, SOC. SHLDR. 1/4 X 5/8
110	RM4330-2	2.	5/16-18 X 3/4 H.S.H.C.S.
110	RM4432-6	1.	NUT, ELASTIC LOCK 10-24
110	RM4479B	1.	5/16-18 ADJUSTABLE HANDLE
110	RM4545A	1.	#10-32 X 1/4 H.S.S.S.NYLON TIP

LOOSE PARTS:

110	671-113A	1.	FLOW CONTROL
110	671F82B	2.	PUSH IN 5/32 TUBE FITTINT
110	671F82G	2.	MALE CONNECTOR
110	AS47-229AU	4.	.33 X .87 X .09 LG. SPACER
110	AS47-229DH	4.	WSHR,ISODMP-.250ID,1.250D,.250
110	AS47-383	4.	WSHR, ISO-.250ID,.750OD,.125TK
110	RM2791-3	4.	1/4-20 HEX NUT
110	RM3162-9	4.	1/4-20 X 2 1/2 H.H.C.S.
110	RM3293-1	4.	1/4 F.W.
110	RM3993-8	4.	1/4 H.S.L.W.

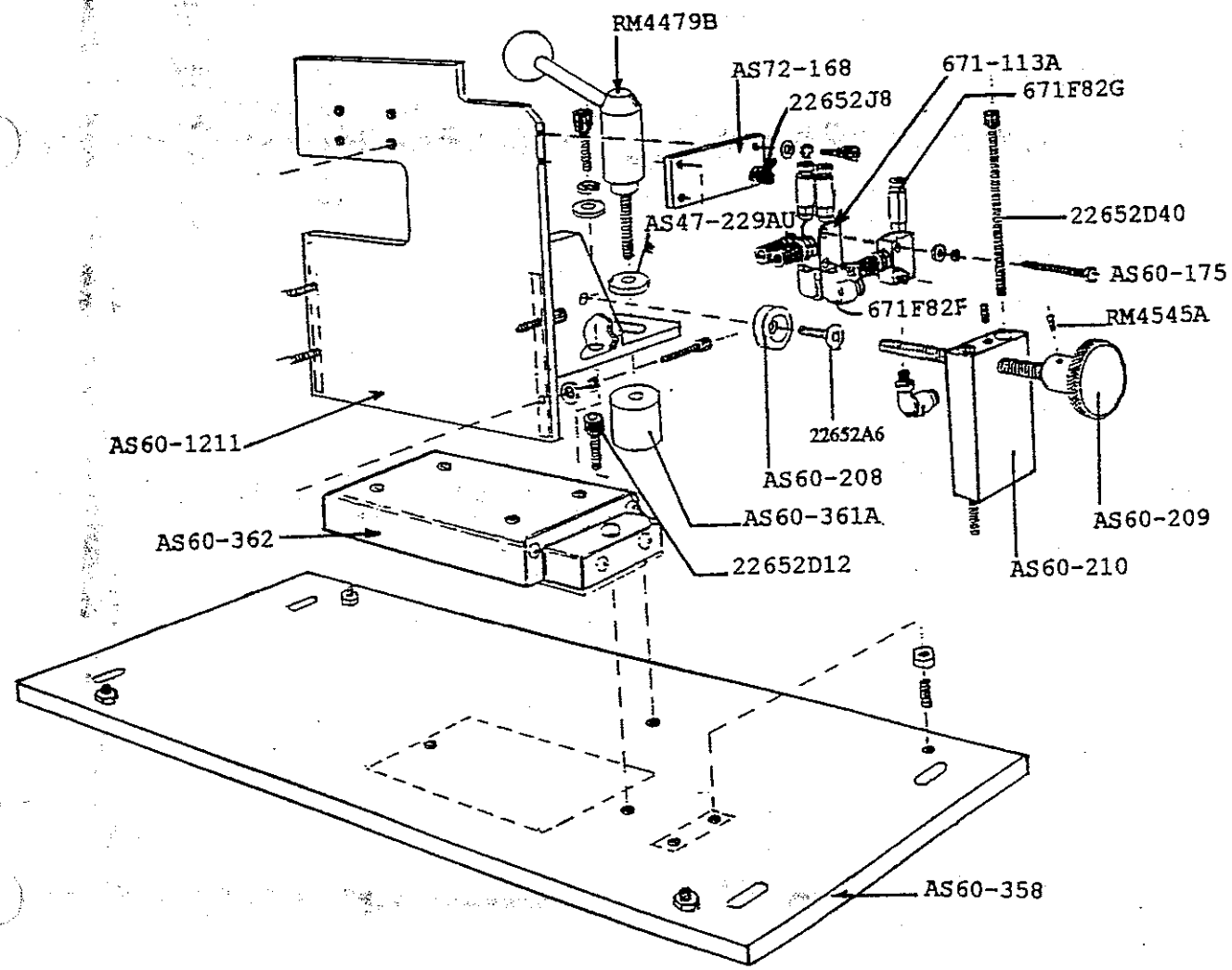

From the library of: Diamond Needle Corp

2884K7B
RECIPRICATING TRIM KNIFE ASSEMBLY

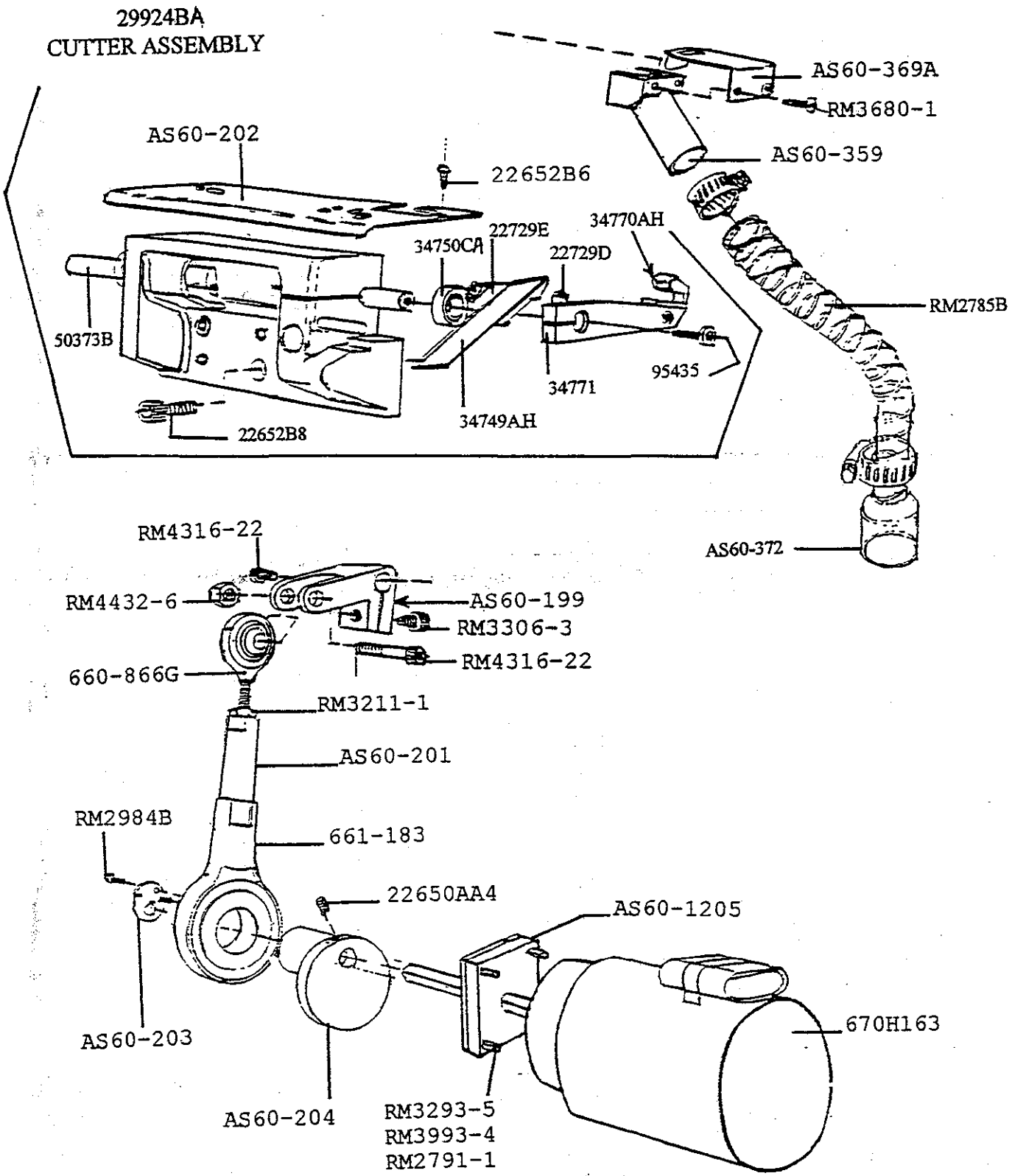

From the library of: Diamond Needle Corp

OPER.	QTY.	PART NO.	DESCRIPTION
010	1	AS60-33	Folder Support
010	2	22656D12	1/4-20 x 3/4 H.S.F.H.C.S.
010	1	AS60-53E	Nut Plate, 1/4-20 x 4"
010	1	AS60-34	Folder Support
010	2	22652D10	1/4-20 x 5/8 H.S.H.C.S.
010	2	RM3993-8	1/4 H.S.L.W.
010	2	RM3293-1	1/4 F.W.
010	2	RM4765-1	'1/4-28 x 1-3/4 LG FPSS
010	2	RM3211-1	1/4-28 Hex Jam Nut
010	1	AS60-111	Bottom Folder
010	1	AS60-109	Angle Folder
010	2	RM2798-1	#8-32 x 1/2 H.S.F.H.C.S.
010	2	RM3293-5	#8 F.W.
010	2	RM3993-4	#8 H.S.L.W.
010	2	RM2791-1	#8-32 Hex Nut
010	1	AS60-107	Folder Channel
010	1	AS60-1412	Folder, Dual Folder Drive
010	4	RM3306-3	#10-32 x 3/8 H.S.H.C.S.
010	4	RM3393-3	#10 H.S.L.W.
010	4	40-38	Washer, .193 ID x 7/16 OD
010	2	AS60-112	Lock Nut w/ Nylon Insert

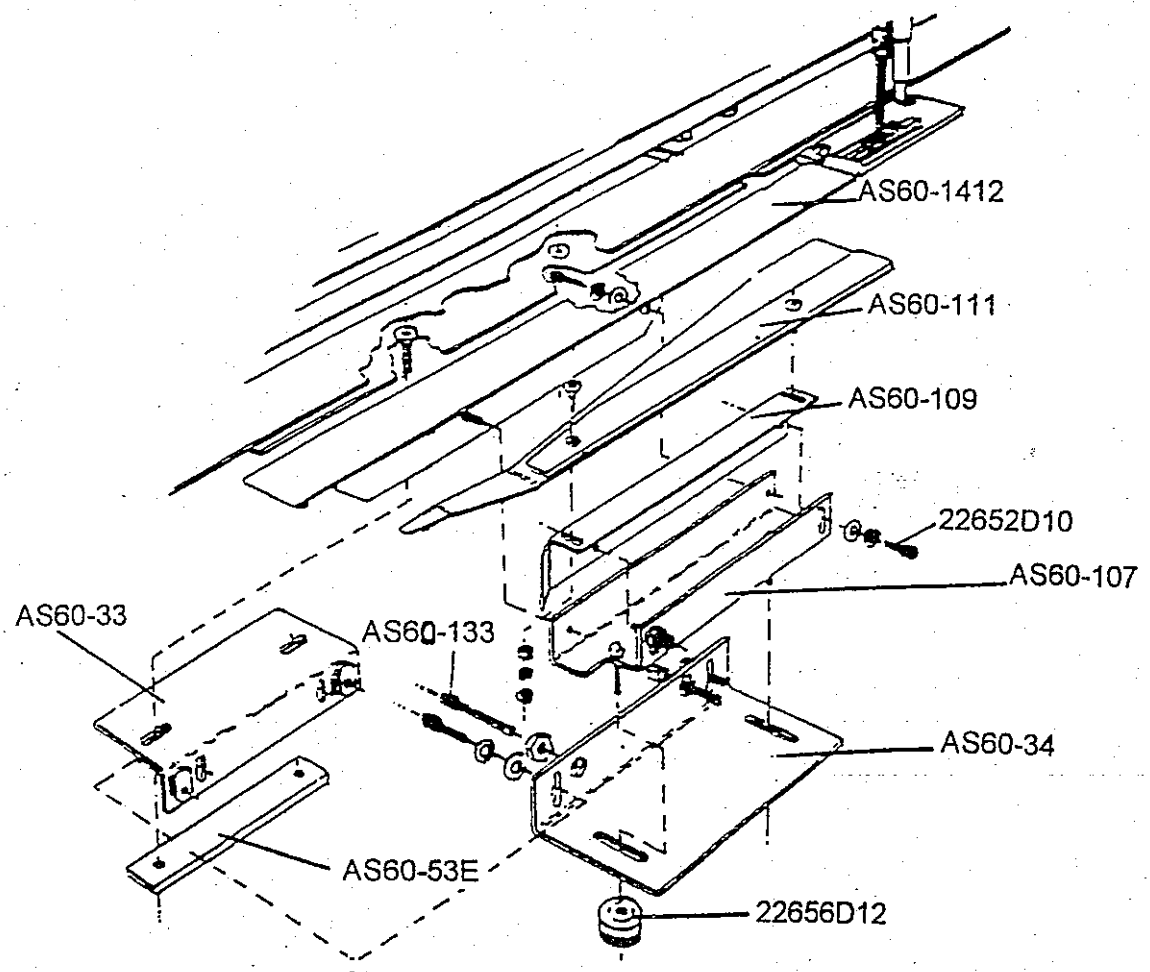

From the library of: Diamond Needle Corp

From the library of: Diamond Needle Corp

OPER.	QTY.	PART NO.	DESCRIPTION
010	1	AS72-958	ANGLE-FOLDER DRIVE-SHORTENED
010	2	RM4591-1	SSCP - 10-24 X 3/4
010	2	660-602	NUT-HEX - 10-24
010	2	AS72-612	PULLEY-30XL037-MODIFIED
010	2	22652A32	SHCS - 8-32 X 2
010	2	AS72-613	STUD-PULLEY
010	2	22652D12	SHCS - 1/4-20 X 3/4
010	2	RM3293-1	FW - 1/4
010	2	RM3993-8	HSLW - 1/4
010	1	AS60-1432	SPACER, PULLEY
010	1	AS72-615	PULLEY-20XL037-MODIFIED
010	1	AS72-614	STUD-PULLEY
010	1	RM3144-12	RING-RETAINING-3/8
010	1	22652D8	SHCS - 1/4-20 X 1/2
010	1	RM3993-8	HSLW - 1/4
010	1	AS47-229CW	WASHER-.257ID,.625OD,.125THK.
010	3	AS60-152-2	LINK-IDLER
010	3	RM2798-4	SFHS - 8-32 X 3/4
010	3	AS47-229BS	SPACER-.171ID.-.249OD.-.412THK.
010	3	AS60-151	PULLEY-IDLER
010	3	RM3293-5	FW - 8
010	3	RM3993-4	HSLW - 8
010	3	RM2791-1	NUT-HEX - 8-32
010	3	AS47-229BL	SPACER-.194ID.-.312OD.-.132THK.
010	3	22652B8	SHCS - 10-24 X 1/2
010	3	RM3293-6	FW - 10
010	3	RM3993-3	HSLW - 10
010	3	AS60-561-2	SPRING-PIVOT LINK
010	3	22652B8	SHCS - 10-24 X 1/2
010	6	RM3293-6	FW - 10
010	3	RM3993-3	HSLW - 10
010	1	AS60-149	LINK-TENSIONER
010	2	62244A	WASHER-.377ID.-.671OD.-.055THK.
010	1	AS60-174	ROLLER-IDLER
010	1	RM2800D	HHCS - 10-32 X 3/8
010	1	RM3293-6	FW - 10
010	1	RM3993-3	HSLW - 10
010	1	22652D8	SHCS - 1/4-20 X 1/2
010	1	RM3293-1	FW - 1/4
010	1	RM3993-8	HSLW - 1/4

From the library of: Diamond Needle Corp

From the library of: Diamond Needle Corp

OPER.	QTY.	PART NO.	DESCRIPTION
010	1	AS60-152-1	LINK-IDLER
010	1	RM2798-4	SFHS - 8-32 X 3/4
010	1	AS47-229BS	SPACER-.171ID.-.249OD.-.412THK.
010	1	AS60-151	PULLEY-IDLER
010	1	RM3293-5	FW - 8
010	1	RM3993-4	HSLW - 8
010	1	RM2791-1	NUT-HEX - 8-32
010	1	AS47-229BL	SPACER-.194ID.-.312OD.-.132THK.
010	1	22652B8	SHCS - 10-24 X 1/2
010	1	RM3293-6	FW - 10
010	1	RM3993-3	HSLW - 10
010	1	AS60-561-2	SPRING-PIVOT LINK
010	1	22652B8	SHCS - 10-24 X 1/2
010	2	RM3293-6	FW - 10
010	1	RM3993-3	HSLW - 10
010	1	AS60-1444	BRACKET-SENSOR
010	1	670B188A	SENSOR (W/ EXT. CABLE)
010	1	LA414	LABEL-SENSOR-SEW
010	2	22652B8	SHCS - 10-24 X 1/2
010	2	RM3293-6	FW - 10
010	2	RM3993-3	HSLW - 10
010	3	RM2731A	CLAMP-CABLE-3/16
010	1	RM2813-3	BHMS - 8-32 X 3/8
010	2	RM3293-5	FW - 8
010	1	RM2805-2	BHMS, 6-32 X 1
010	1	RM5040-39	SPACER .171 ID - .250 OD - .500 L
010	1	670H184A	MOTOR-STEPPER-2.9 AMP W/CABLE 72"L
010	3	22652A8	SHCS - 8-32 X 1/2
010	3	RM3293-5	FW - 8
010	3	RM3993-4	HSLW - 8
010	1	661-165-3	PULLEY-14XL037-1/4 BORE
010	1	670E40	CLAMP-CABLE-1/2
010	1	RM2813-3	BHMS - 8-32 X 3/8
010	1	RM3293-5	FW - 8
010	1	670E861M	CABLE, GROUND - 72"
010	1	AS60-1400	BLOCK, MOTOR TERMINAL MOUNTING
010	1	RM6600A	PCB, MOTOR TERMINAL
010	1	AS60-1402	CLAMP
010	2	RM2805-4	BHS - #6-32 X 3/8 LG.
010	1	RM3680-1	BUT HS #6-32 X 1/4 LG.

From the library of: Diamond Needle Corp

From the library of: Diamond Needle Corp

OPER.	QTY.	PART NO.	DESCRIPTION
010	1	RM3557-21	BELT-TIMING-212XL037
010	1	AS60-382	BLOWER-TRIM KNIFE (uncurl)
010	1	22652B6	SHCS - 10-24 X 3/8
010	1	RM3293-6	FW - 10
010	1	RM3993-3	HSLW - 10
010	2	AS60-156	BLOWER
010	3	AS47-229BV	SPACER-.203ID.-.500OD.-.141THK.
010	1	22652B10	SHCS - 10-24 X 5/8
010	1	22652B12	SHCS - 10-24 X 3/4
010	2	RM3293-6	FW - 10
010	2	RM3993-3	HSLW - 10
010	2	AS60-1433	STANDOFF-OUTER PLATE
010	1	AS60-1456	BLOWER, OUTER UNCURL
010	1	671F86F	5/32 TUBE UNION
010	4	22652D12	SHCS - 1/4-20 X 3/4
010	4	22652D16	SHCS - 1/4-20 X 1
010	1	RM3293-1	FW - 1/4
010	5	RM3993-8	HSLW - 1/4
010	1	AS60-1455	STAND-OFF, OUTER PLATE
010	1	22658D8	BHSCS - 1/4-20 X 1/2
010	1	AS60-1431	PLATE-FOLDER DRIVE OUTER
010	1	AS72-615	PULLEY-20XL037-MODIFIED
010	1	AS72-613	STUD-PULLEY
010	1	RM3144-12	RING-RETAINING-3/8
010	1	RM4475-1	BHSCS - 1/4-20 X 3/8
010	1	AS72-615	PULLEY-20XL037-MOFIFIED
010	1	AS72-613	STUD-PULLEY
010	1	RM3144-12	RING-RETAINING-3/8
010	1	RM2797-2	SHCS - 1/4-20 X 5/8
010	1	RM3993-8	HSLW - 1/4
010	1	RM3293-1	FW - 1/4

From the library of: Diamond Needle Corp

From the library of: Diamond Needle Corp

OPER.	QTY.	PART NO.	DESCRIPTION
010	1	AS60-174	ROLLER-IDLER
010	1	AS72-613	STUD-PULLEY
010	1	RM3144-12	RING-RETAINING-3/8
010	1	AS47-229CW	WASHER-.257ID,.625OD,.125THK.
010	1	22652D12	SHCS - 1/4-20 X 3/4
010	1	RM3993-8	HSLW - 1/4
010	1	RM3293-1	FW - 1/4
010	1	AS72-814	BLOWER, UPPER PRESSER FOOT
010	1	22653B10	SHCS - 10-32 X 5/8
010	1	RM3993-3	HSLW - 10
010	2	RM3293-6	FW - 10
010	1	RM2791-7	NUT - HEX - 10-32
010	3	AS60-152-1	LINK-IDLER
010	3	RM2798-4	SFHS - 8-32 X 3/4
010	3	AS47-229BS	SPACER-.171ID.-.249OD.-.412THK.
010	3	AS60-151	PULLEY-IDLER
010	3	RM3293-5	FW - 8
010	3	RM3993-4	HSLW - 8
010	3	RM2791-1	NUT-HEX - 8-32
010	3	AS47-229BL	SPACER-.194ID.-.312OD.-.132THK.
010	3	22652B8	SHCS - 10-24 X 1/2
010	3	RM3293-6	FW - 10
010	3	RM3993-3	HSLW - 10
010	3	AS60-561-2	SPRING-PIVOT LINK
010	3	22652B8	SHCS - 10-24 X 1/2
010	6	RM3293-6	FW - 10
010	3	RM3993-3	HSLW - 10
010	1	AS60-152-2	LINK-IDLER
010	1	RM2798-4	SFHS - 8-32 X 3/4
010	1	AS47-229BS	SPACER-.171ID.-.249OD.-.412THK.
010	1	AS60-151	PULLEY-IDLER
010	1	RM3293-5	FW - 8
010	1	RM3993-4	HSLW - 8
010	1	RM2791-1	NUT-HEX - 8-32
010	1	AS47-229BL	SPACER-.194ID.-.312OD.-.132THK.
010	1	22652B8	SHCS - 10-24 X 1/2
010	1	RM3293-6	FW - 10
010	1	RM3993-3	HSLW - 10
010	1	AS60-561-2	SPRING-PIVOT LINK
010	1	22652B8	SHCS - 10-24 X 1/2
010	2	RM3293-6	FW - 10
010	1	RM3993-3	HSLW - 10

From the library of: Diamond Needle Corp

From the library of: Diamond Needle Corp

OPER.	QTY.	PART NO.	DESCRIPTION
010	1	RM3557-40	BELT-TIMING-207XL037
010	1	LA323	LABEL
010	1	AS60-1454	COVER- FOLDER DRIVE
010	7	RM5040-39	SPACER .171 ID - .250 OD - .500 L
010	7	RM2805-2	BHMS - 6-32 X 1
010	2	AS72-606	ANCHOR-PIVOT SHAFT
010	4	RM3162-2	HHCS - 1/4-20 X 3/4
010	4	RM3293-1	FW - 1/4
010	4	RM3993-8	HSLW - 1/4
010	1	AS72-616	SHAFT-1/2 DIA.-7 1/4 LG.
010	2	22650AA4	SSCP - 8-32 X 1/4
010	1	AS72-609	BRACKET-FOLDER DRIVE
010	1	671F86B	"Y"-TUBING-1/4T. X 1/4T.
010	2	671F82H	REDUCER-TUBING-1/4T. X 5/32T.
010	1	671F82B	5/32 PLUG-IN 'Y'
010	1	671F86C	5/32 UNION 'Y'
010	1	22652A20	SHCS - 8-32 X 1 1/4
010	2	RM3293-5	FW - 8
010	1	RM3993-4	HSLW - 8
010	1	RM2791-1	NUT-HEX - 8-32
010	1	AS60-1581	HANDLE-ADJUSTABLE - 1/4-20
010	2	AS47-229AX	SPACER-.260ID.-.500OD.-.156THK.
010	1	AS60-59	BLOCK-CLAMP-W/STUD
010	2	22653B8	SHCS - 10-32 X 1/2
010	2	RM3993-3	HSLW - 10
010	1	AS60-59-1	BLOCK-CLAMP
010	2	22653B8	SHCS - 10-32 X 1/2
010	2	RM3993-3	HSLW - 10
010	2	AS72-623	NUT PLATE
010	4	RM3162-5	HHCS, 1/4-20 X 2 1/4
010	4	RM3293-1	1/4 FLAT WASHER
010	4	RM3993-8	1/4 HSLW

From the library of: Diamond Needle Corp

From the library of: Diamond Needle Corp

2884AA14 HEMMER FOLDER DRIVE ASSEMBLY
OPER. 130 - DNHS

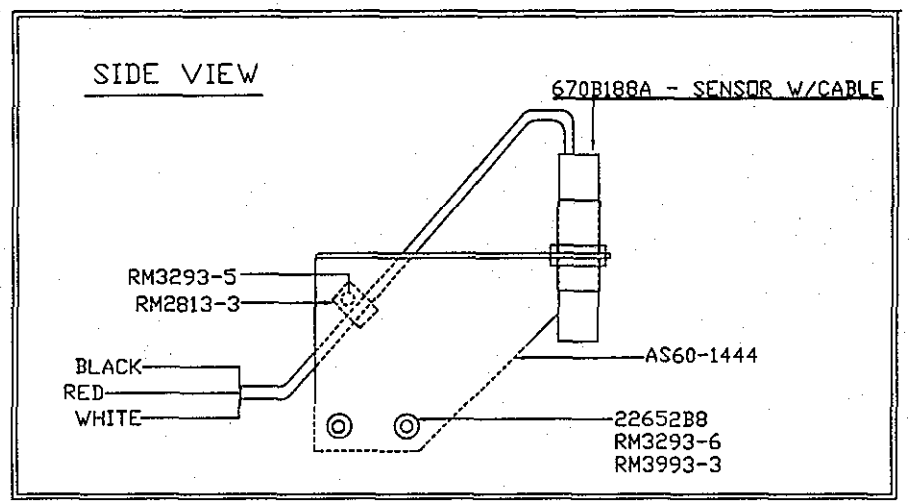

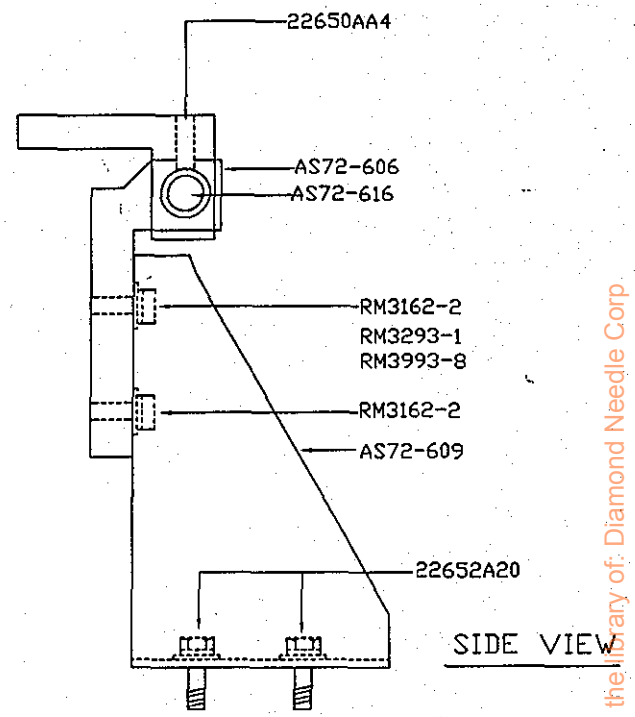

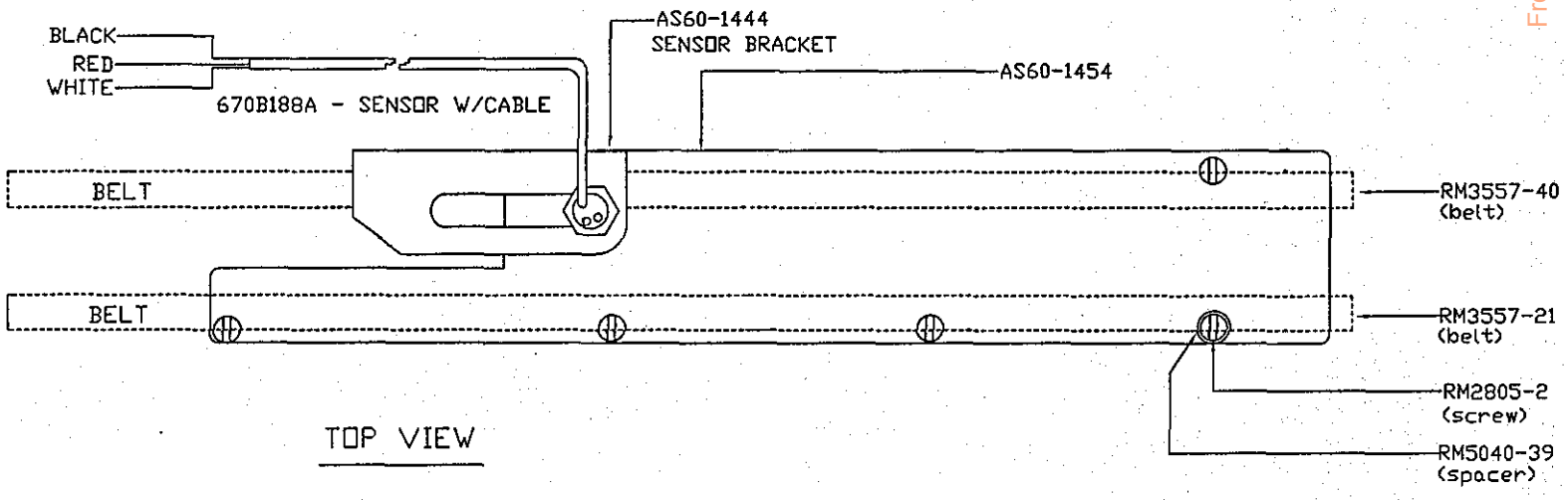

From the Library of: Diamond Needle Corp.

From the library of: Diamond Needle Corp

2884AA26 HEMMER FOLDER DRIVE ASSEMBLY
OPER. 130 - DNHS2

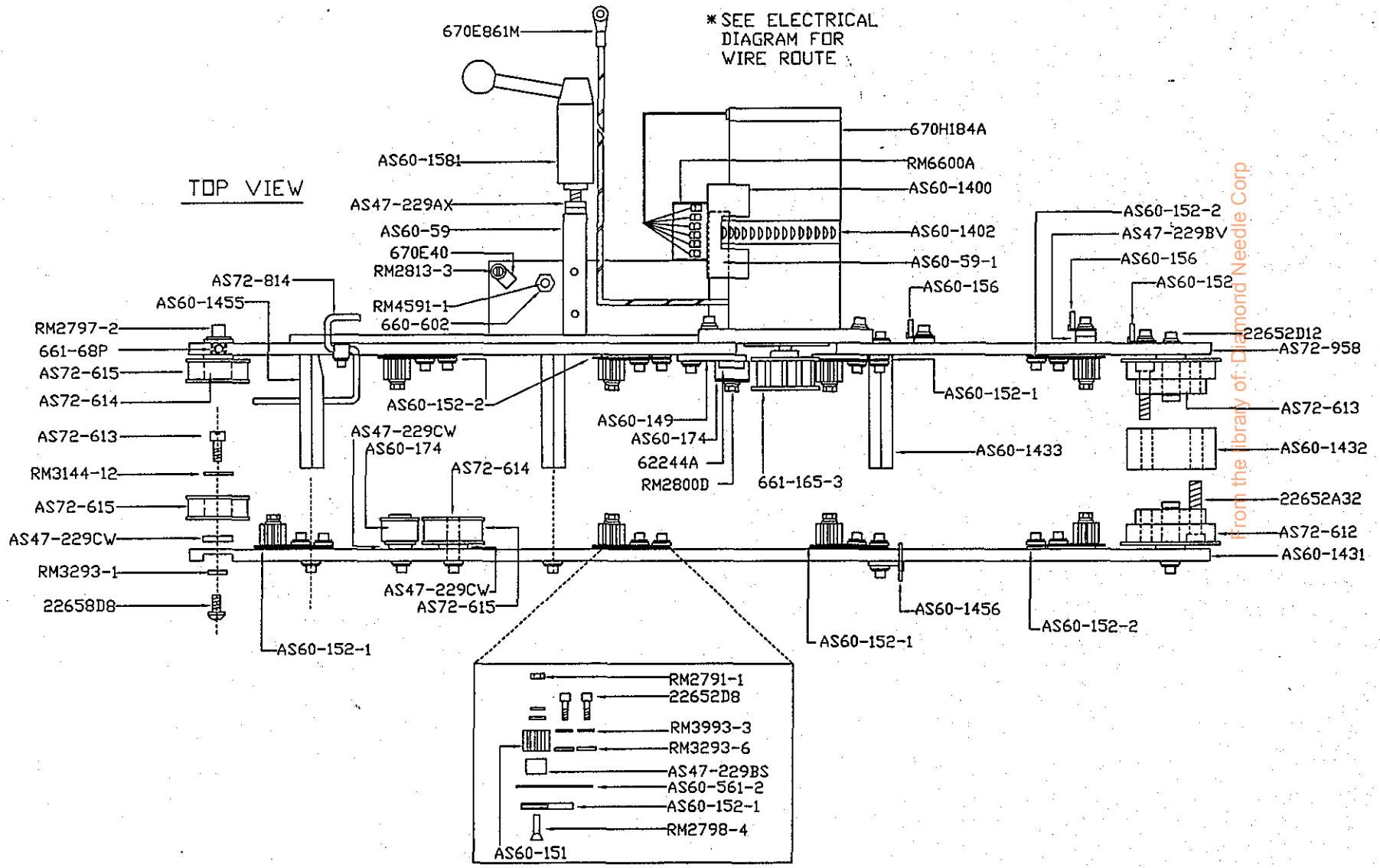

from the library of: Diamond Needle Corp

From the library of: Diamond Needle Corp

PARENT NUMBER: 2884K12B DESCRIPTION: ASS'Y, OIL PUMP, MOTOR & COOLER

SEQ NO.	COMPONENT	QUANTITY PER	DESCRIPTION
150	22652A6	4.	#8-32 X 3/8 H.S.H.C.S.
150	22652D8	2.	1/4-20 X 1/2 H.S.H.C.S.
150	29480AEU	1.	OIL PUMP KIT
150	29480ZE	1.	OIL COOL ASSEMBLY
150	670G58-1	1.	RING TERMINAL
150	AS72-811	1.	PLATE, OIL PUMP & COOLER
150	NU65	2.	#73 WIRE NUTS
150	RM3293-1	2.	1/4 F.W.
150	RM3293-5	4.	#8 F.W.
150	RM3993-4	4.	#8 H.S.L.W.
150	RM3993-8	2.	1/4 H.S.L.W.

LOOSE PARTS:

150	22652D10	4.	1/4-20 X 5/8 H.S.H.C.S.
150	2884K12B	1.	ASS'Y, OIL PUMP,MOTOR & COOLER
150	29476SD	1.	OIL FILTER ASSEMBLY
150	661-88	2.	FITTING
150	671B34	2.	TUBING
150	AS73-903-2	4.	1/4-20 HALF ROUND NUT
150	RM3293-1	4.	1/4 F.W.
150	RM3993-8	4.	1/4 H.S.L.W.

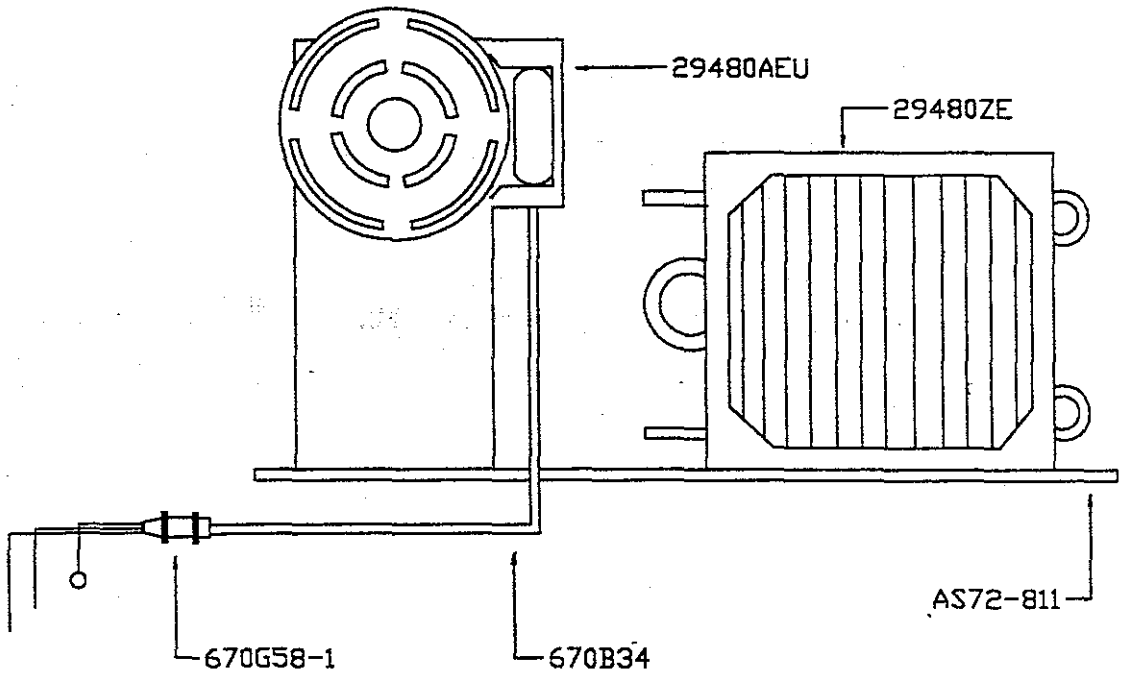

From the library of: Diamond Needle Corp

PARENT NUMBER: 2884K14 DESCRIPTION: ASSEMBLY, FLAPPER

SEQ NO.	COMPONENT	QUANTITY PER	DESCRIPTION
010	22652E20	4.	SCREW
010	22653B16	2.	#10-32 X 1 H.S.H.C.S. 556B1
010	22659B8	4.	#10-32 X 1/2" H.S.BUT. H.C.S.
010	671-102D	2.	ELBOW- FLOW CONT.-1/8M.X1/4T.
010	671A147	1.	ACTUATOR, ROTARY
010	AS47-229CD	6.	SPACER.257I.D.,.5000D,.125 THK
010	AS47-680	2.	SCREW BUMPER
010	AS72-110	1.	STOP STACKER DROP
010	AS72-116	1.	BRACKET, ACT. STACK FLAT LH
010	AS72-117	1.	BRACKET, ACT STACK FLAP RH
010	AS72-63	2.	SPACER, FLAPPER
010	AS72-64	1.	STACKER FLAP
010	AS73-601	2.	ARM - TORQUE
010	RM2791-7	2.	#10-32 HEX NUT
010	RM3293-7	4.	#6 FLAT WASHER
010	RM3680-3	4.	#6-32 X 5/8 BUT. H.C.S.
010	RM3993-3	2.	#10 H.S.L.W.
010	RM3993-5	4.	5/16 H.S.L.W.
010	RM3993-6	4.	#6 H.S.L.W.
010	RM3993-8	6.	1/4 H.S.L.W.
010	RM4478-4	6.	SHCS M6X16

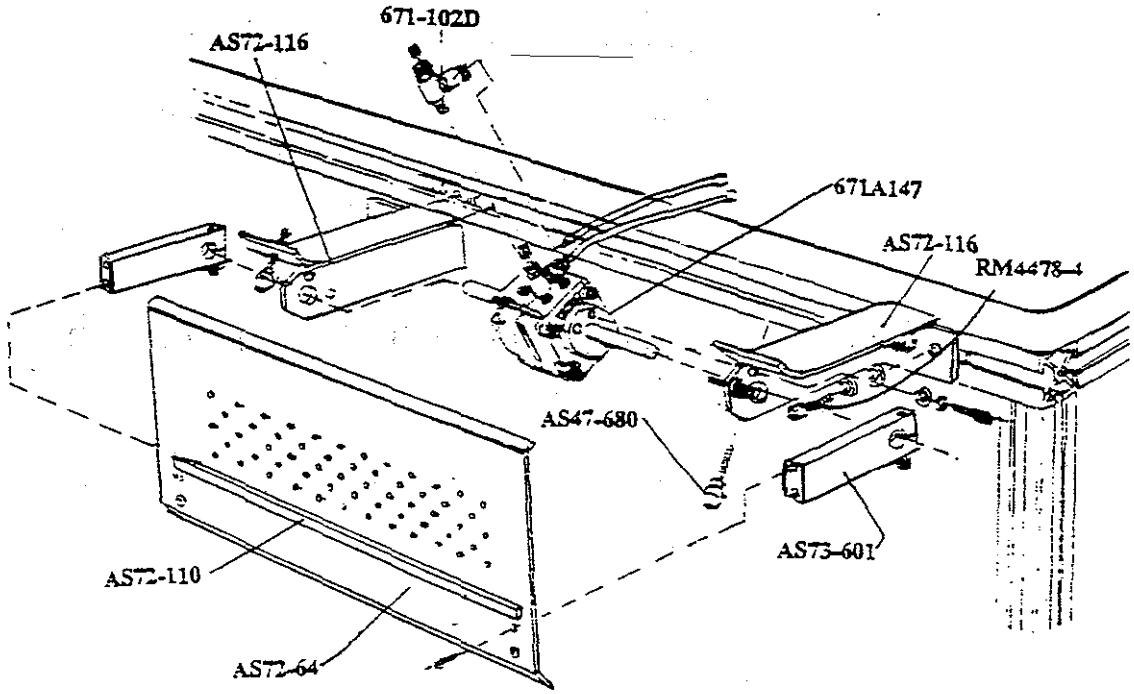

From the library of: Diamond Needle Corp

PARENT NUMBER: 2884K15 DESCRIPTION: ASSEMBLY, STACKER TRAY

SEQ NO.	COMPONENT	QUANTITY PER	DESCRIPTION
010	22658D8	2.	1/4-20 X 1/2 H.S. BUT. H.C.S.
010	22659B8	4.	#10-32 X 1/2" H.S.BUT. H.C.S.
010	660-478	4.	#10-32 KEPS HEX NUT
010	660-902A	2.	SHAFT COLLAR
010	671-102D	1.	ELBOW- FLOW CONT.-1/8M.X1/4T.
010	671A144-1	1.	AIR CYLNDR1 1/16 B-16S-TYPE DX
010	671F81C	1.	FITTING, PUSH IN-1/4" TUBE
010	AS47-286	1.	PUSH PLATE
010	AS47-287	1.	PUSH BAR
010	AS47-289	2.	BRACKET, TRAY MOUNTING
010	AS47-291	1.	SHAFT BRACKET
010	AS47-383	2.	WSHR, ISO-.250ID,.750OD,.125TK
010	AS72-126	1.	INDEX BED, STACKING TRAY
010	AS72-129	2.	STOP ANGLE
010	AS72-135	1.	BRACKET, TRAY SUPPORT
010	RM2742A	6.	RIVET
010	RM2809-3	2.	CYL BRACKET
010	RM3162-6	2.	1/4-20 X 1/2 H.H.C.S.
010	RM3211-2	1.	5/16-24 HEX JAM NUT
010	RM3293-1	2.	1/4 F.W.
010	RM3293-2	4.	5/16 F.W.
010	RM3293-6	4.	#10 F.W.
010	RM3595	1.	QUICK EXHAUST
010	RM3697-1	2.	#10-32 X 1/2 TRUSS H.M.S.
010	RM3993-5	4.	5/16 H.S.L.W.
010	RM3993-8	2.	1/4 H.S.L.W.
010	RM4330-2	4.	5/16-18 X 3/4 H.S.H.C.S.

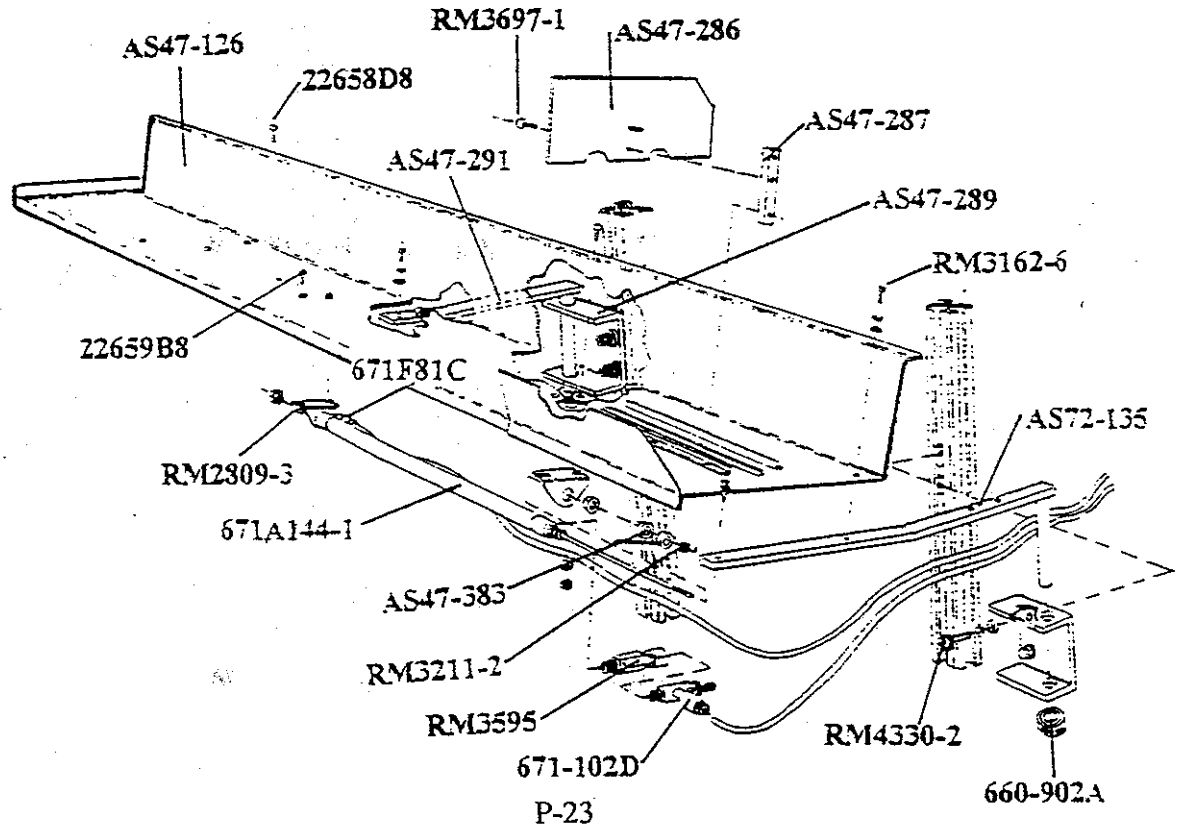

From the library of: Diamond Needle Corp

PARENT NUMBER: 2884K16C DESCRIPTION: PNEUMATIC PANEL ASSEMBLY

SEQ NO.	COMPONENT	QUANTITY PER	DESCRIPTION
010	22571F	18.	PIPE SCREW 1-I-8
010	22653B10	2.	#10-32 X 5/8" H.S.H.C.S.
010	22653B8	4.	#10-32 X 1/2 H.S.H.C.S. 28D3
010	661-66	1.	MANIFOLD
010	671-102	3.	FLOW CONTROL VALVE
010	671-102D	2.	ELBOW- FLOW CONT.-1/8M.X1/4T.
010	671-103A	11.	4 WAY SOLENOID VALVE
010	671-104A	2.	VALVE STACKING KIT
010	671-183	4.	VALVE-4 WAY BASE MOUNT
010	671-184	2.	VALVE,4-WAY-BASE MOUNT
010	671-185	1.	KIT, END PLATE - BASE MOUNT
010	671D15	5.	AIR PRS GUAGE (0-60)
010	671D28	3.	REGULATOR NUT
010	671D9	3.	REGULATOR
010	671F117	3.	ADAPTOR, FEMALE/MALE-1/8 NPT
010	671F13	1.	IMPERIAL TEE
010	671F80A	3.	3/8" X 1/4 NPT KQL MALE EBLOW
010	671F80B	1.	PUSH IN MALE CONNECTOR
010	671F81A	1.	FITTING, PUSH IN-1/4" TUBE
010	671F81C	14.	FITTING, PUSH IN-1/4" TUBE
010	671F81D	3.	PUSH-IN 1/4" TUBE CONNECTOR
010	671F82A	3.	PUSH IN 5/32 TUBE FITTING
010	671F82C	13.	5/32" X 1/8 NPT KQL MALE ELBOW
010	671F87	4.	1/4 PIPE PLUG
010	AS72-708	1.	STRIP, MOUNTING - REGULATOR
010	AS72-711	2.	STRIP, RETAINING MANIFOLD
010	AS72-841	1.	PLATE, PNEUMATICS - SBH5B
010	AS72-842	1.	PLATE, PNEUMATICS - ADD ON
010	AS72-843	1.	PLATE, SPLICE, PNEUMATICS
010	LA397	1.	LABEL, GAUGE-AIR SUPPLY
010	LA398	1.	LABEL, GAUGE-MAIN AIR
010	LA399	1.	LABEL, GAUGE-TRIM VENTURI
010	LA400	1.	LABEL, GAUGE-CHAIN VENTURI
010	LA401	1.	LABEL, GAUGE-SEW HEAD
010	LA402	1.	LABEL, GAUGE-FOOT PRESSURE
010	LA420	1.	LABEL, OUTPUT BD. -LOWER RIGHT
010	LA422	1.	LABEL, INPUT BD. - UPPER
010	LA423	1.	LABEL, INPUT BD.-LOWER LEFT
010	LA424	1.	LABEL, GAUGE, PULLER PRESSURE
010	LA426	1.	LABEL, VALVE BANK -LOWER RIGHT
010	LA431	1.	LABEL, VALVE BANK-LOWER LEFT
010	LA432	1.	LABEL, VALVE BANK-UPPER RIGHT
010	LA433	1.	LABEL, OUTPUT BD,-LOWER LEFT
010	LA434	1.	LABEL, OUTPUT BD.-UPPER RIGHT
010	RM2797-2	4.	1/4-20 X 5/8 H.S.H.C.S.
010	RM2850D	3.	TEE
010	RM2975B	2.	ADAPTER
010	RM3287-2	2.	1/8 M.N.P.T. HEX NIPPLE
010	RM3289-5	6.	SCREW, BHMS #10-32 X 3/8"L
010	RM3293-1	4.	1/4 F.W.
010	RM3293-6	14.	#10 F.W.

From the library of: Diamond Needle Corp

PARENT NUMBER: 2884K16C DESCRIPTION: PNEUMATIC PANEL ASSEMBLY

SEQ NO.	COMPONENT	QUANTITY PER	DESCRIPTION
010	RM3306-5	6.	#10-32 X 1 1/2 H.S.H.C.S.
010	RM3993-3	14.	#10 H.S.L.W.
010	RM3993-8	4.	1/4 H.S.L.W.
010	RM4098-1	2.	PILOT VALVE
010	RM4594-2	4.	SCREW, #10-32 X 1/2 FHCS
010	RM5040-43	4.	STANDOFF-HEX - 10-32 - 1 3/8LG
010	RM6416	3.	ASM. P.C.B. UNICON 8-OUTPUT
010	RM6424B	3.	SNAPTRACK, PC BOARD MTG.

LOOSE PARTS:

190	671-149A	1.	FILTER, SMC
190	671-149C	1.	REGULATOR, 1/4 NPT
190	671-149F	2.	BRACKET, L-TYPE
190	671-149G	2.	GAUGE, 0-160 PSI-1/8 NPT
190	671-149J	1.	VALVE, SHUTOFF - WITH LOCKOUT
190	671B18	8.	3/8 TUBING
190	671B33A	1.	COILED HOSE
190	671B37A	72.	TUBING, 4MM O.D. (.157")
190	671F13	1.	IMPERIAL TEE
190	671F6	1.	BUSHING
190	671F8	2.	STR FITTING
190	671F80B	1.	PUSH IN MALE CONNECTOR
190	AS72-844	2.	BAR, MOUNTING, FILTER
190	RM2797-2	6.	1/4-20 X 5/8 H.S.H.C.S.
190	RM2997D	66.	1/4 TUBING
190	RM3293-1	6.	1/4 F.W.
190	RM3293-2	4.	5/16 F.W.
190	RM3685	1.	BLOW GUN
190	RM3993-5	4.	5/16 H.S.L.W.
190	RM3993-8	6.	1/4 H.S.L.W.
190	RM4330-5	4.	5/16 - 18 X 5/8 H.S.H.C.S.

From the library of: Diamond Needle Corp

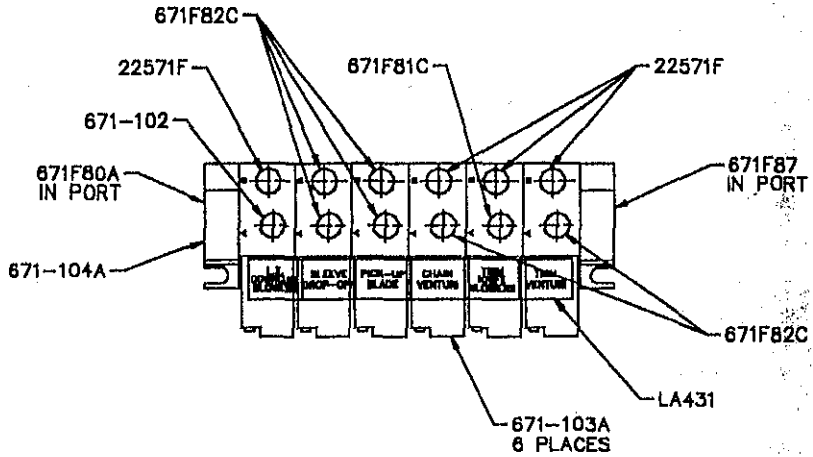
671F82C
22571F
671F81C
22571F
671-102
671F80A
IN PORT
671F87
IN PORT
671-104A
671F82C
LA431
671-103A
6 PLACES
VALVE BANK LOWER LEFT

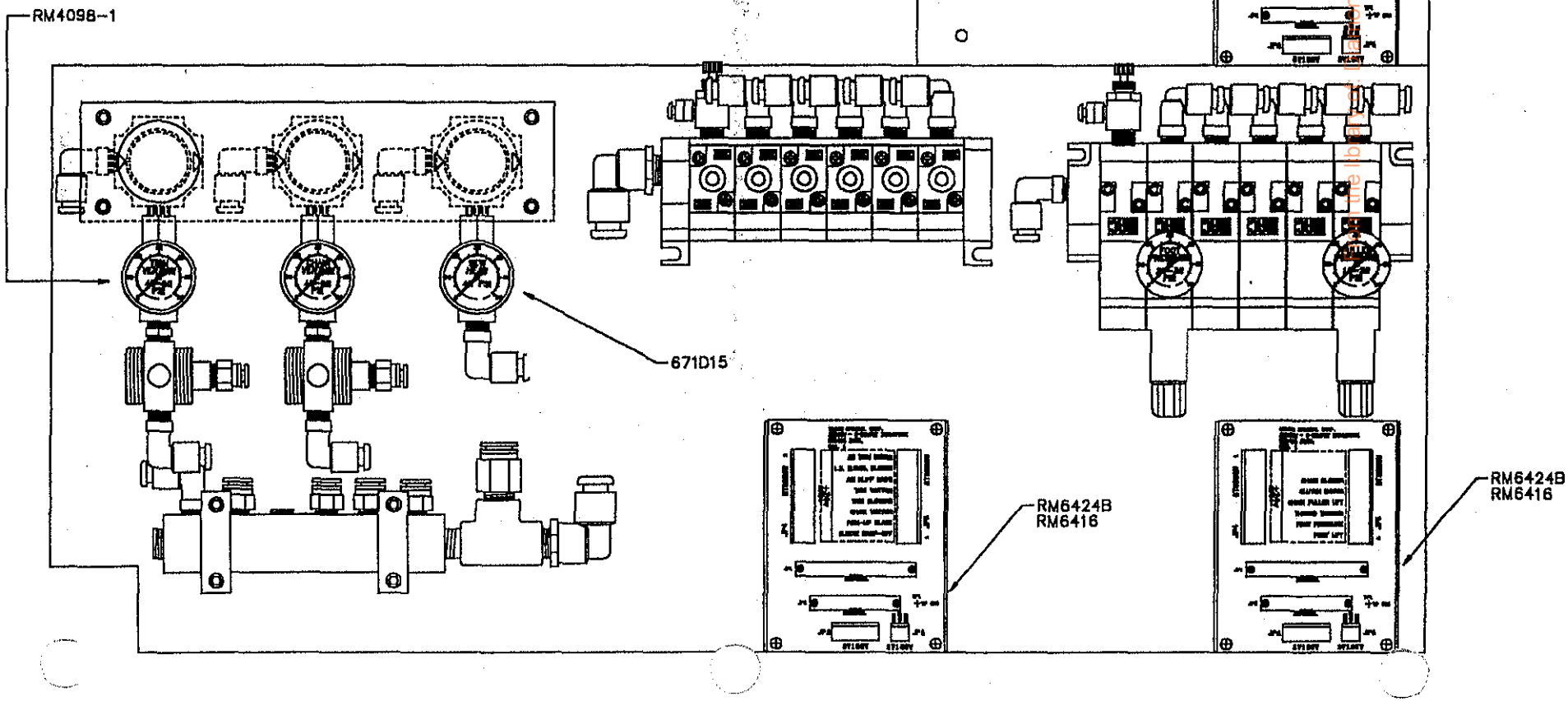
RM4098-1
RM6424B
RM6416
671D15
RM6424B
RM6416
RM6424B
RM6416

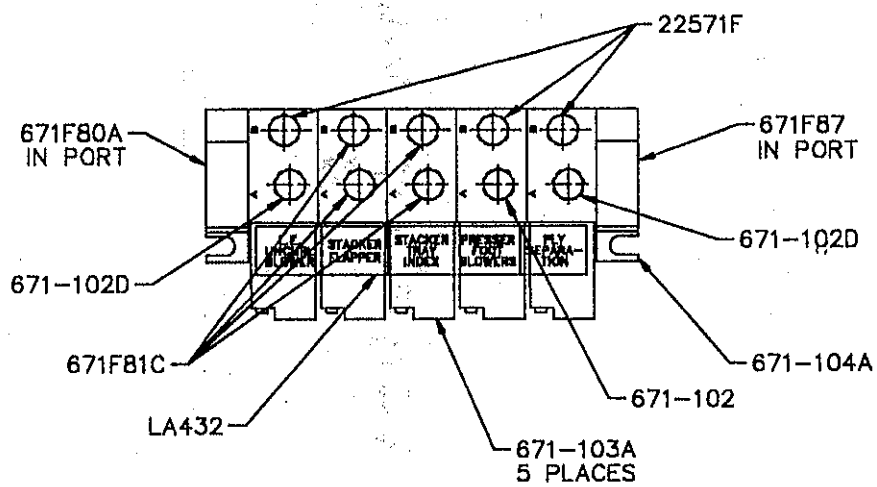

VALVE BANK, UPPER RIGHT

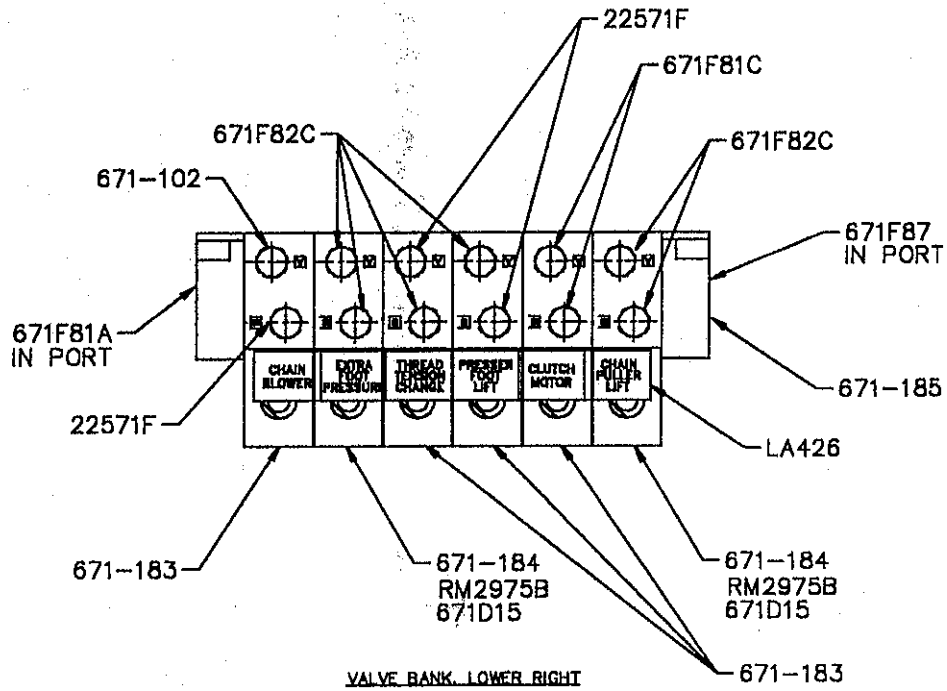

VALVE BANK, LOWER RIGHT

From the library of: Diamond Needle Corp

PARENT NUMBER: 2884K17A DESCRIPTION: ASSEMBLY, MANUAL PUSH BUTTON

SEQ NO.	COMPONENT	QUANTITY PER	DESCRIPTION
010	AS47-855	4.	PUSHBUTTON GUARD
010	AS72-74	1.	BRACKET, MANUAL PUSH BUTTON
010	LA350	1.	LABEL, HEMMER PANEL
010	RM2791-7	2.	#10-32 HEX NUT
010	RM3293-6	2.	#10 F.W.
010	RM3993-3	2.	#10 H.S.L.W.
010	RM4594-4	2.	SFHS-10-32 X 1 1/4
010	RM5170-5	4.	PUSH BUTTON SWITCH CAP, WHITE
010	RM6448	1.	ASSY., PCB - MANUAL PB.'S

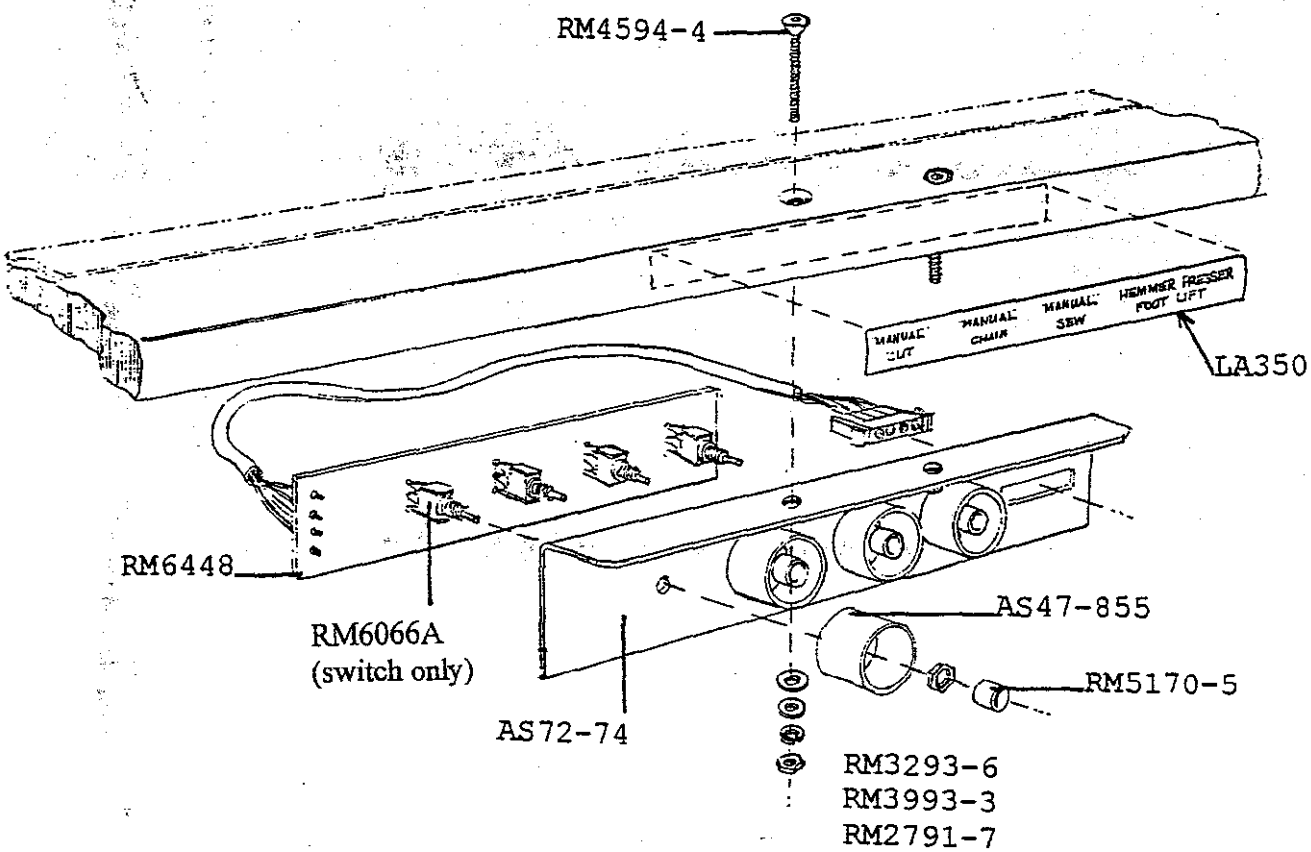

From the library of: Diamond Needle Corp

PARENT NUMBER: 2884K21B DESCRIPTION: CONTROL BOX ASSEMBLY

SEQ NO.	COMPONENT	QUANTITY PER	DESCRIPTION
010	22660A96	4.	#8-32 X 1 1/2 PAN H.M.S.
010	2884N6	1.	POWER SUPPLY ASSEMBLY
010	661-13A	5.	DOUBLE FACED TAPE
010	670-59	1.	POWER SUPPLY, +24 V/3 A
010	670E1000A	1.	CABLE,15 WIRE RIBBON'D'JP43INT
010	670E1000B	1.	CABLE,15 WIRE RIBBON'D'JP41INT
010	670E1000C	1.	CABLE,15 WIRE RIBBON'D'JP42INT
010	670E1000D	1.	CABLE,15 WIRE RIBBON'D'JP40INT
010	670E1089A	1.	CABLE, E-STOP / RESET-INT.
010	670E1143	1.	CBL ASM.EXPANDED 8-OUTPUT INT.
010	670E2	7.	CABLE TIE
010	670E835B	1.	CABLE, CPU TERMINAL
010	670E977	2.	CABLE, RELAY CONTROL-INT
010	670E978	1.	CABLE,ESTOP,IDC,INT
010	670E979	1.	CABLE,MICRO 24V ESTOP PWR.,INT
010	670E980	1.	CABLE,24V/2A PWR TO ESTOP INT
010	670E990	1.	CABLE, 24V/3A PWR TO E-STOP
010	670E993A	1.	CABLE,STEPPER SIGNAL,JP35, INT
010	670E993B	1.	CBL, STEPPER SIGNAL, JP36 INT
010	670E997	2.	CABLE, STEPPER OUTPUT
010	670E999A	1.	CABLE, CONVEYOR ENCODER - INT
010	670G209-1	2.	CONN, 5 PIN CABLES MOUNT DIN
010	670H134B	1.	FILTER ASSEMBLY, FAN
010	670H150	1.	PABST/PAN MOTOR AXEL FAN
010	AS47-1010	4.	PRINTED CIRCUIT BOARD CLIP
010	AS47-1352	2.	BUMPER STRIP
010	AS87-1009	1.	INSULATOR, DRIVER
010	AS87-1010	1.	BOX CONTROL
010	AS87-1012B	1.	COVER, CONTROL BOX
010	AS87-1015	2.	GUIDE MEMORY CARD
010	AS87-1016	3.	PANEL - 3 HOLE
010	AS87-1018	1.	PANEL, 4-SLOT
010	AS87-1019	1.	PANEL - BLANK
010	AS87-1036	1.	PANEL - TOP
010	AS87-1037	1.	PANEL - 1 SWT
010	AS87-1042	1.	PANEL, TOP BLANK
010	AS87-1046	1.	COVER, SWITCH
010	RM2733A	16.	6-32 X 1/2 B.H.M.S.
010	RM2736A	8.	6-32 X 1/4 B.H.M.S.
010	RM2747-2	16.	ITLW - 6
010	RM2747-6	8.	ITLW - 8
010	RM2813-2	24.	#8-32 X 5/16 BD.H.M.S.
010	RM2813-4	4.	#8-32 X 1/2 BD.H.M.S.
010	RM3289-7	8.	#10-32 X 1/4 BINDER HEAD SCREW
010	RM3293-5	4.	#8 F.W.
010	RM4320-6	3.	#10-32X1/4 FLAT HD MACH. SCREW
010	RM4432-7	4.	#8-32 ELASTIC LOCK-NUT
010	RM4618-1	4.	#8-32X1 3/4 SLOTTED FLAT HD
010	RM4669	1.	GUARD, FAN
010	RM5040-36	8.	#2209 STANDOFF
010	RM5040-41	2.	NYLON STANDOFF

From the library of: Diamond Needle Corp

PARENT NUMBER: 2884K21B DESCRIPTION: CONTROL BOX ASSEMBLY

SEQ NO.	COMPONENT	QUANTITY PER	DESCRIPTION
010	RM5433-1	5.	HARDWARE-REAR MOUNTING
010	RM6307	1.	IEC CONNECTOR
010	RM6412	1.	ASM. P.C.B. UNICON E-STOP
010	RM6436	1.	ASM. P.C.B. UNICON MAXI CPU
010	RM6447	1.	DRIVER ASSEMBLY

REPORT DATE 3/20/95 BILL OF MATERIAL

PARENT NUMBER: 2884N6 DESCRIPTION: POWER SUPPLY ASSEMBLY

SEQ NO.	COMPONENT	QUANTITY PER	DESCRIPTION
025	AS87-1031	1.	PLATE-POWER SUPPLY
025	RM2736A	16.	6-32 X 1/4 B.H.M.S.
025	RM2747-2	16.	ITLW - 6
025	RM2747-6	4.	ITLW - 8
025	RM2813-2	4.	#8-32 X 5/16 BD.H.M.S.
025	RM5040-26	4.	SPACER 8-32 X 1/2 LG. HEX
025	RM5040-36	8.	#2209 STANDOFF
025	RM6303	1.	PS-5V3A/12V2A/-12V.5A-SWITCHNG
025	RM6304	1.	PS-24 2A-SWITCHING

LOOSE PARTS:

220	22659B8	2.	#10-32 X 1/2" H.S.BUT. H.C.S.
220	2884K21B	1.	CONTROL BOX ASSEMBLY
220	AS72-715	2.	BRACKET, BOX - SHORT
220	AS72-716	2.	BRACKET, BOX - LONG
220	LA325	1.	VOLTAGE CAUTION LABEL
220	LA326	1.	COVER CAUTION LABEL
220	RM2797-2	4.	1/4-20 X 5/8 H.S.H.C.S.
220	RM3293-1	4.	1/4 F.W.
220	RM3993-8	4.	1/4 H.S.L.W.

From the library of: Diamond Needle Corp

2884K21B
CONTROL BOX ASSEMBLY

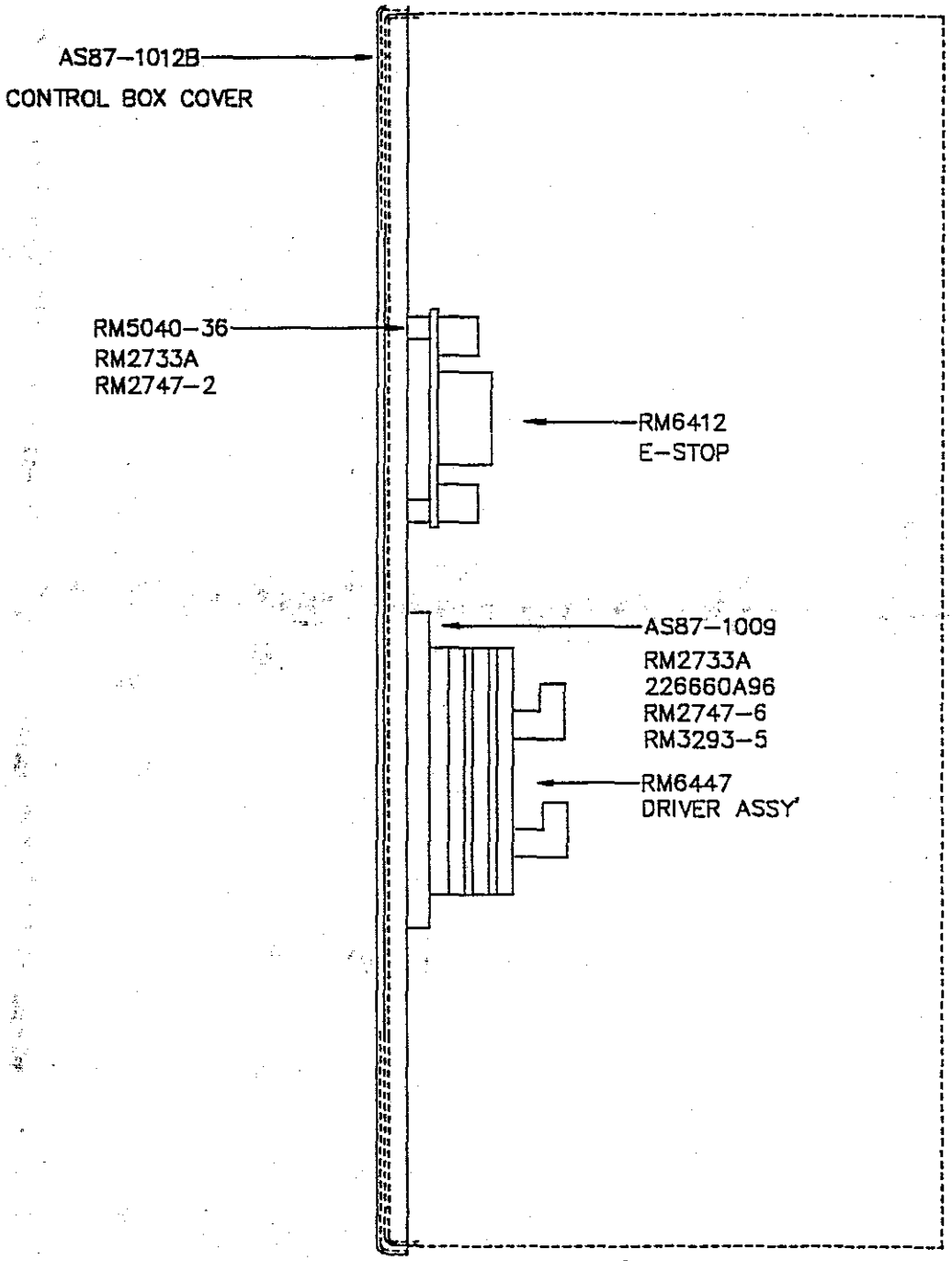

From the library of: Diamond Needle Corp

2884K21B
CONTROL BOX ASSEMBLY

VIEW OF INSIDE BACK WALL

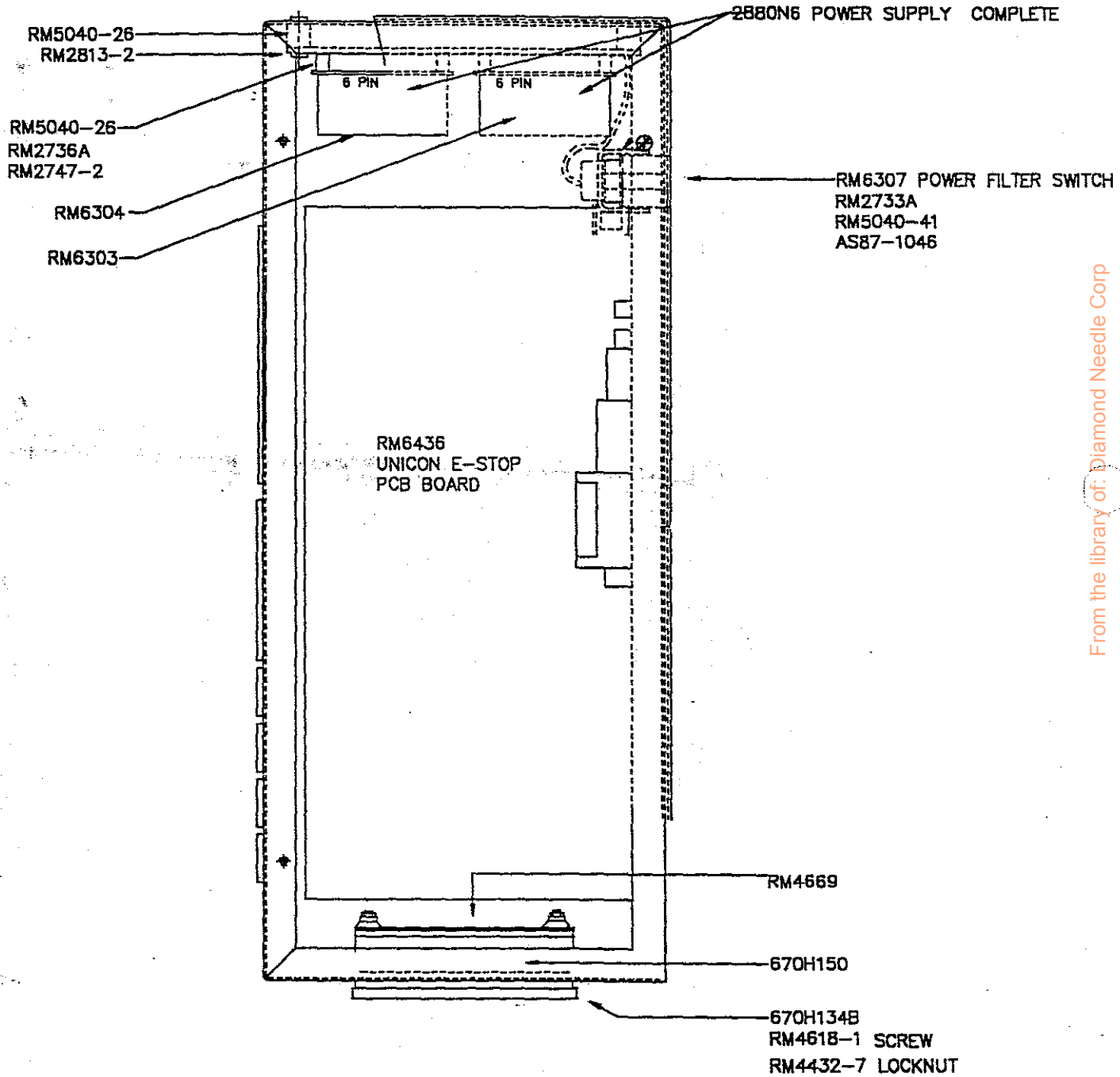

From the library of: Diamond Needle Corp

2884K21B
CONTROL BOX ASSEMBLY

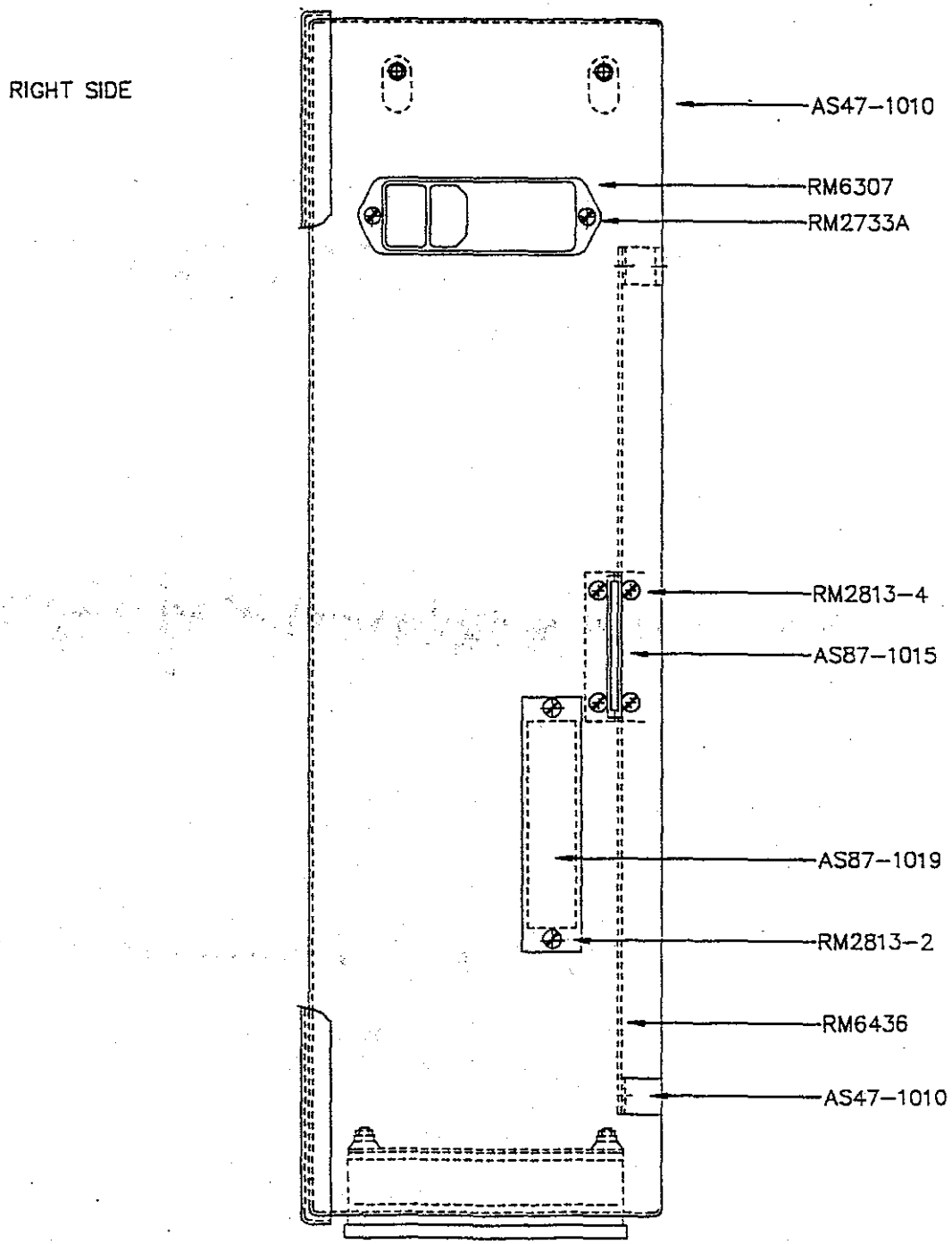

From the library of: Diamond Needle Corp

2884K21B
CONTROL BOX ASSEMBLY

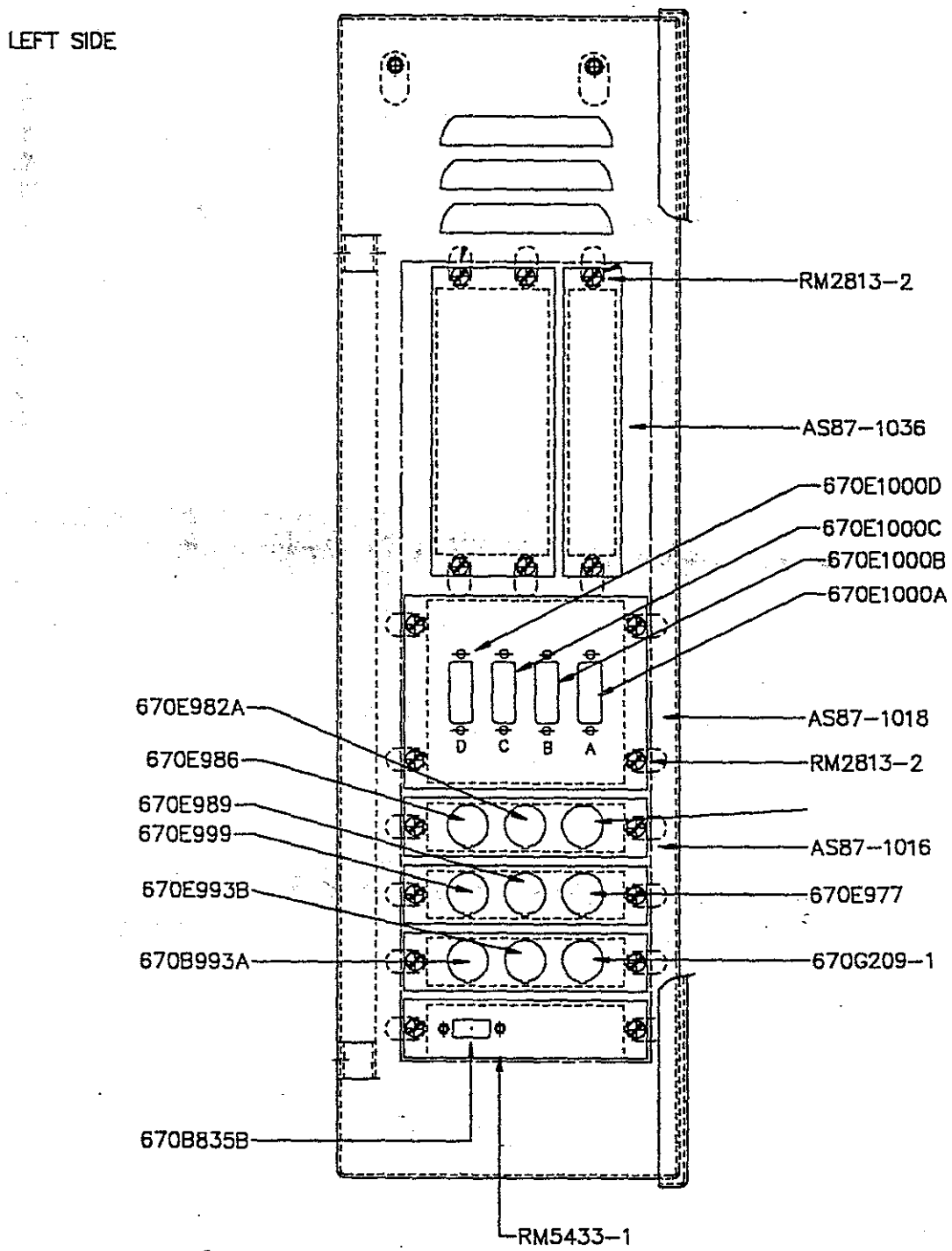

From the library of: Diamond Needle Corp

PARENT NUMBER: 2884K22B DESCRIPTION: ASSEMBLY, POWER SUPPLY BOX

SEQ NO.	COMPONENT	QUANTITY PER	DESCRIPTION
010	RM5086-3	2.	NUT-HEX-BRASS - 8-32
010	RM5092-4	2.	BSPHMS - 8-32 X 1
230	661-104C	1.	HOLE-PLUG, HEYCO 3/4" DIA.
230	661-59A	3.	BSHG. LIQUID-TIGHT .733 DIA.
230	661-59G	5.	BSHG. LIQUID-TIGHT .886 DIA.
230	670E1005C	1.	CABLE, GROUND-RING TO SPADE
230	670E1009B	1.	CABLE, POWER-FORK TO SPADE
230	670E1011C	1.	CABLE, FORK TERMINAL #6 INT.
230	670E1011D	1.	CABLE, FORK TERMINAL #6 INT
230	670E1012D	1.	CABLE, POWER - FORK TO FORK
230	670E1012E	1.	CABLE, POWER-FORK TO FORK
230	670E1013B	1.	CABLE, POWER-220VAC TO FAN
230	670E1014A	1.	CBL,RING #10 TO FORK #6 1 COND
230	670E1014C	1.	CABLE, GROUND-RING TO FORK
230	670E1082A	1.	CABLE, POWER-FUSE TO FILTER
230	670E1083A	1.	CABLE, POWER-FUSE TO FILTER
230	670E2	4.	CABLE TIE
230	670F68A	1.	FUSE BLOCK
230	670F69G	3.	FUSE, CLASS CC 7 AMP
230	670G58-1	2.	RING TERMINAL
230	670G81B	2.	6 POS. BARRIER JUMPER (HSLT)
230	670H134B	1.	FILTER ASSEMBLY, FAN
230	670H150	1.	PABST/PAN MOTOR AXEL FAN
230	AS72-163	2.	BAR, GROUNDING
230	AS72-845	1.	BOX,ELECTRICAL-PWR SUPPLY "B"
230	AS87-1012C	1.	COVER, BOX - POWER SUPPLY
230	LA325	1.	VOLTAGE CAUTION LABEL
230	LA326	1.	COVER CAUTION LABEL
230	RM2747-6	23.	ITLW - 8
230	RM2791-1	9.	#8-32 HEX NUT
230	RM2813-3	17.	#8-32 X 3/8 BD.H.M.S.
230	RM2813-4	2.	#8-32 X 1/2 BD.H.M.S.
230	RM3293-5	13.	#8 F.W.
230	RM3352A	4.	TERM,FORK #16/14AWG #6STUD
230	RM3625-4	1.	12, POS. TERM. STRIP DBLE ROW
230	RM4320-6	3.	#10-32X1/4 FLAT HD MACH. SCREW
230	RM4378-2	7.	#10-32 X 3/8 PAN H.M.S.
230	RM4432-7	4.	#8-32 ELASTIC LOCK-NUT
230	RM4618-1	4.	#8-32X1 3/4 SLOTTED FLAT HD
230	RM4669	1.	GUARD, FAN
230	RM6196	1.	LINE FILTR,10A COMMN&DIFF MODE
230	RM6317	2.	SHAFT EXTENSION #ZAV-TO
230	RM6318	2.	INTERLOCK EXT. SWITCH ZVV-TO
230	RM6319	1.	P1-25/V/SVB
230	RM6426	2.	SWITCH, ACTRIAC CRYDOM TD2410
230	RM6427	2.	DRIVER, STEPPER, ANAHIEM
230	RM6449-1	2.	BUSHING, STRAIN RELIEF-.220 D

From the library of: Diamond Needle Corp

LOOSE PARTS:

230	22659B8	2.	#10-32 X 1/2" H.S.BUT. H.C.S.
230	2884K22B	1.	ASSEMBLY, POWER SUPPLY BOX
230	670E1002A	1.	CBL,AC TRIM MTR CNTRL 2800SBH1
230	670E2	6.	CABLE TIE
230	670E985B	1.	CABLE, POWER-220VAC TO MICRO
230	670E995B	1.	CABLE, RELAY CONTROL EXT.
230	AS72-715	2.	BRACKET, BOX - SHORT
230	AS72-716	2.	BRACKET, BOX - LONG
230	RM2797-2	4.	1/4-20 X 5/8 H.S.H.C.S.
230	RM3293-1	4.	1/4 F.W.

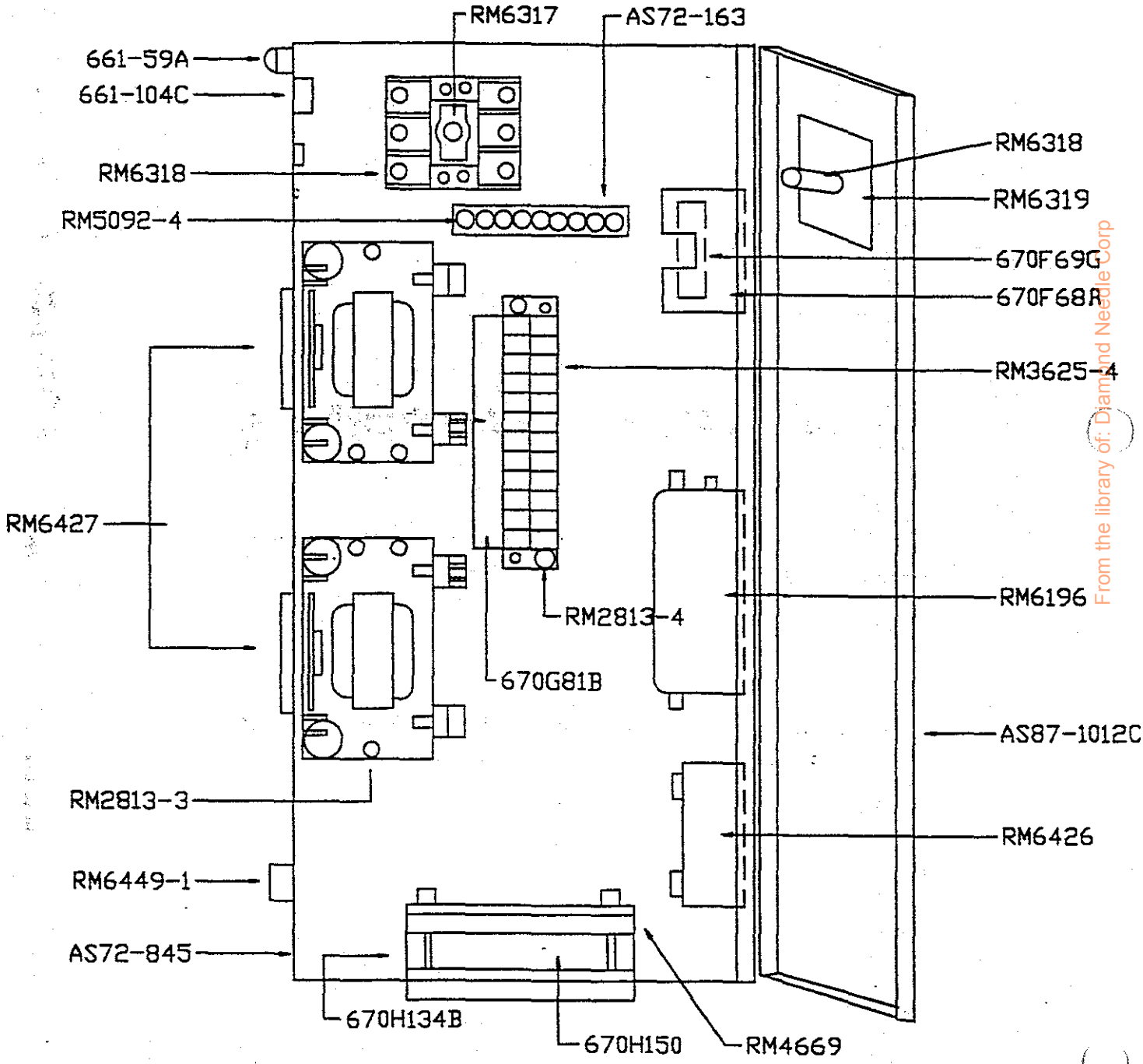

From the library of: Diamond Needle Corp

* For cable location see electrical diagram located in the Technical section of this catalog.

OPER.	QTY.	PART NO.	DESCRIPTION
010	1	AS72-935	Plate, Puller Mounting
010	4	SS4121215SP	#10-28 x .469" Lg. PHS
010	4	RM3993-3	#10 HSLW
010	4	RM3293-6	#10 FW
010	1	AS72-862	Bracket, Motor
010	4	22652B10	SHCS - #10-24 X 5/8 LG.
010	4	RM3293-6	FW - #10
010	4	RM3993-3	HSLW - #10
010	1	670H183A	Stepper Motor
010	4	22652A8	SHCS #8-32 x 1/2
010	4	RM3293-5	FW - #8
010	4	RM3993-4	HSLW - #8
010	1	RM6600A	PCB Assy., Stepper Junction
010	2	RM5040-13	Stand-off
010	2	22652J10	#6-32 X 5/8" Lg. SHCS
010	2	RM3293-7	#6 FW
010	2	RM2747-2	#6 ITLW
010	1	RM3305-5	Cable Clamp
010	1	661-165-26	Pulley, Timing (040MXL36)
010	1	RM3557-38	Belt, Timing
010	1	AS72-943	Plate, Cylinder Mounting
010	4	22652A8	SHCS #8-32 x 1/2
010	4	RM3293-5	FW - #8
010	4	RM3993-4	HSLW - #8
010	1	AS60-1712	Sholder Opening Blower
010	2	AS72-936	Plate, Clevis
010	3	22652A10	SHCS #8-32 x 5/8" Lg.
010	1	RM3658-4	#8--32 x 3/4" HHCS
010	1	AS60-1712	Sholder Opening Blower
010	1	RM3293-5	FW - #8
010	4	RM3993-4	HSLW - #8
010	1	AS72-938	Roller, Idler
010	1	AS72-939	Roller, Idler
010	2	AS72-940	Shaft, Pivot Support
010	4	660-142A	Cotter Pin, 1/16" x 1/2" Lg.

From the library of: Diamond Needle Corp

From the library of: Diamond Needle Corp

OPER.	QTY.	PART NO.	DESCRIPTION
010	1	AS72-934	Arm, Pivot
010	1	AS72-941	Spacer, Block
010	1	AS72-942	Finger, Pulley Support
010	4	22652A8	SHCS #8-32 x 1/2
010	4	RM3993-4	HSLW - #8
010	1	AS72-932	Pulley, Nose
010	1	AS72-931	Shaft, Pulley
010	1	22650CK3	#4-40 x 3/16" Lg. CPSS
010	1	671A189	Cylinder
010	1	RM2993-5	Clevis
010	2	671F81C	1/8 NPT X 1/4 Tube Elbow
010	1	RM2791-7	#10-32 HN

From the library of: Diamond Needle Corp

From the library of: Diamond Needle Corp

DNHTC CHAIN PULLER ASSEMBLY – 2884AD10

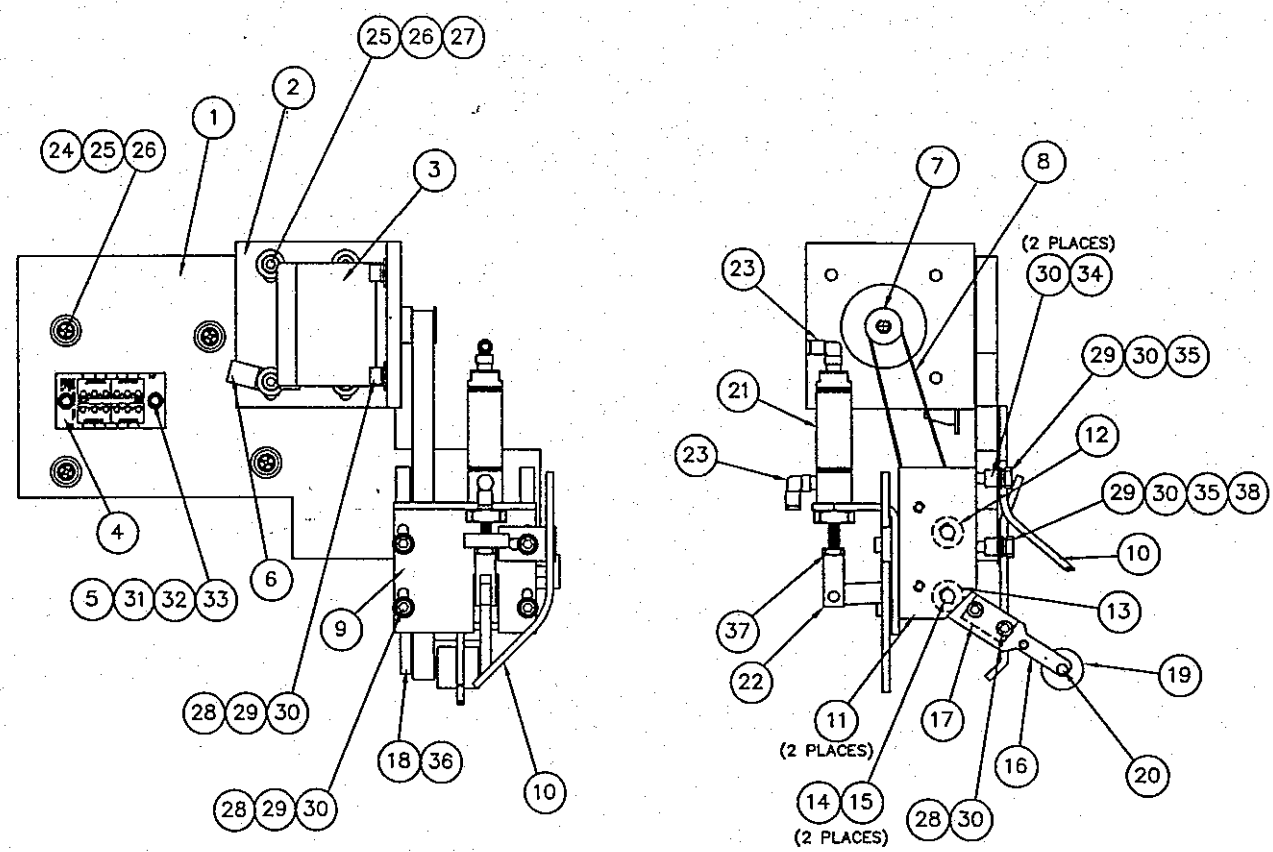

DET.	AM'T	PART NO.	MATERIAL/DESCRIPTION
1	1	AS72-935	PLATE, PULLER MOUNTING
2	1	AS72-862	BRACKET, MOTOR
3	1	670H183A	STEPPER MOTOR
4	1	RM6600A	PCB ASM, STEPPER JUNCTION
5	2	RM5040-13	STAND-OFF, .313 LG x .313 O.D.
6	1	RM3305-5	CABLE CLAMP 1/2 O.D.
7	1	661-165-26	PULLEY, TIMING 20 GROOVE/ .509 P.D.
8	1	RM3557-38	BELT, TIMING
9	1	AS72-943	PLATE, CYLINDER MOUNTING
10	2	AS60-1712	BLOWER, SHOLDER OPENING
11	2	AS72-936	PLATE, CLEVIS
12	1	AS72-938	ROLLER, IDLER
13	1	AS72-939	ROLLER, IDLER
14	2	AS72-940	SHAFT, PIVOT SUPPORT
15	4	660-142A	COTTER PIN, 1/16" x 1/2" LG.
16	1	AS72-934	ARM, PIVOT
17	1	AS72-941	SPACER, BLOCK
18	1	AS72-942	FINGER, PULLEY SUPPORT
19	1	AS72-932	PULLEY, NOSE
20	1	AS72-931	SHAFT, PULLEY
21	1	671A189	CYLINDER
22	1	RM2993-5	CLEVIS
23	2	671F81C	1/8 NPT x 1/4 TUBE ELBOW
24	4	SS4121215SF	#10-28 x .469" LG. PHS
25	8	RM3993-3	#10 HSLW
26	8	RM3293-6	#10 FW
27	4	22652B10	#10-24 x 5/8 LG. SHCS
28	12	22652A8	#8-32 x 1/2 SHCS
29	10	RM3293-5	#8 FW
30	16	RM3993-4	#8 HSLW
31	2	22652J10	#6-32 x 5/8" LG. SHCS
32	2	RM3293-7	#6 FW
33	2	RM2747-2	#6 ITLW
34	2	22652A10	#8-32 x 5/8" LG SHCS
35	2	RM3658-4	#8-32 x3/4" LG. HHCS
36	1	22650CK3	#4-40 x 3/16 LG. CPSS SET SCREW
37	1	651H	#10-32 HEX NUT
38	1.	AS60-1736	VENTURI CHAIN BLOWER

From the library of: Diamond Needle Corp

From the library of: Diamond Needle Corp

OPER.	QTY.	PART NO.	DESCRIPTION
010	1	99372A	SCREW
010	3	99312A	SCREW
010	1	99697TA	SPRING
010	1	99666TA	KNIFE LEVER
010	1	99322	NUT
010	1	99672UE	SLIDING BLOCK
010	1	AS60-1757	INLET, KNIFE - MODIFIED
010	1	AS60-1758	TUBE, VENTURI - MODIFIED
010	2	80265	WASHER
010	2	22729J	SCREW
010	2	95435A	SCREW
010	1	AS60-1759	UPPER KNIFE
010	1	AS60-1760	LOWER KNIFE
010	1	99672UD	LEVER
010	1	99672TC	PLASTIC INSERT
010	1	95954	WASHER
010	1	96280	RETAINING RING
010	1	96275	RETAINING RING
010	4	22652B8	SCREW
010	2	80557	WASHER
010	1	AS60-1763	BRACKET, CYLINDER HOUSING
010	1	AS60-1748	CUTTER BASE
010	1	AS60-1749	CUTTER COVER
010	1	AS60-1750	ROD END
010	1	AS60-1751	CYLINDER MOUNTING PLATE
010	1	AS60-1752	CYLINDER MOUNTING BRACKET
010	1	AS72-966	ROLLER SHAFT
010	1	AS72-967	ROLLER
010	2	22653B10	#10-32 X 5/8 LG. SHCS
010	2	RM3293-6	#10 FLAT WASHER
010	2	RM3993-3	#10 HSLW
010	1	RM2809-1	CYLINDER PIVOT BRACKET (BIMBA D-780)
010	8	RM2747-6	#8 ITLW
010	10	RM2791-1	#8-32 HEX NUT
010	2	22652A8	#8-32 X 1/2 SHCS
010	1	RM2808-3	#6-32 X 3/16 SSCP
010	1	671A267	CYL., 7/16 BORE, .313 STRK., 1" EXTEN.
010	1	AS60-1753	PLATE, CYLINDER MTG. LEFT CLOTH
010	2	22650CK3	#4-40 X 3/16 H. S. C. P. S. S.
010	2	671F82F	MALE ELBOW, 10-32 X 5/32
010	2	22657C12	#10-32 X 3/4 H. S. F. H. C. S.
010	1	AS60-1762	SPACER, KNIFE

From the library of: Diamond Needle Corp

From the library of: Diamond Needle Corp

DNHTC FLAT BED CHAIN CUTTER – 2884AD12

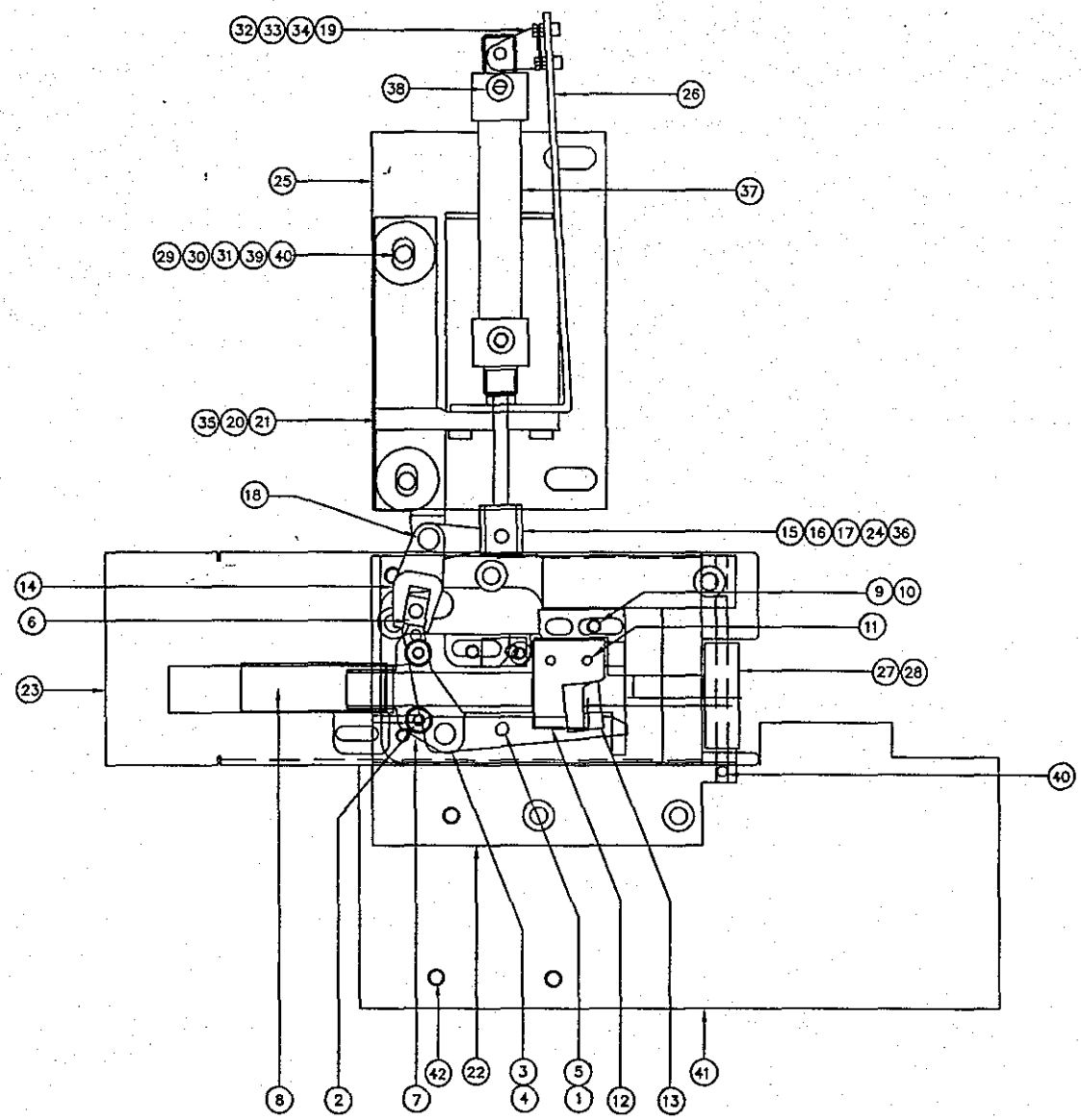

DET.	AM'T	PART NO.	MATERIAL/DESCRIPTION
1	1	99372A	SCREW
2	3	99312A	SCREW
3	1	99697TA	SPRING
4	1	99666TA	KNIFE LEVER
5	1	99322	NUT
6	1	99672UE	SLIDING BLOCK
7	1	AS60–1757	INLET, KNIFE – MODIFIED
8	1	AS60–1758	TUBE, VENTURI – MODIFIED
9	2	80265	WASHER
10	2	22729J	SCREW
11	2	95435A	SCREW
12	1	AS60–1759	UPPER KNIFE
13	1	AS60–1760	LOWER KNIFE
14	1	99672UD	LEVER
15	1	99672TC	PLASTIC INSERT
16	1	95954	WASHER
17	1	96280	RETAINING RING
18	1	96275	RETAINING RING
19	4	22653B8	SCREW
20	2	80557	WASHER
21	1	AS60–1763	BRACKET, CYLINDER HOUSING

DET.	AM'T	PART NO.	MATERIAL/DESCRIPTION
22	1	AS60–1748	CUTTER BASE
23	1	AS60–1749	CUTTER COVER
24	1	AS60–1750	ROD END
25	1	AS60–1751	CYLINDER MOUNTING PLATE
26	1	AS60–1752	CYLINDER MOUNTING BRACKET
27	1	AS72–966	ROLLER SHAFT
28	1	AS72–967	ROLLER
29	2	22653B10	#10–32 X 5/8 LG. SHCS
30	2	RM3293–6	#10 FLAT WASHER
31	2	RM3993–3	#10 HSLW
32	1	RM2809–1	CYLINDER PIVOT BRACKET
33	8	RM2747–6	#8 ITLW
34	10	RM2791–1	#8–32 HEX NUT
35	2	22652A8	#8–32 X 1/2 SHCS
36	1	RM2808–3	#6–32 X 3/16 SSCP
37	1	671A267	CYL.,7/16 BORE,.313 STRK.,1" EXTEN.
38	2	671F82F	FITTING, PUSH–IN TUBE 5/32
39	2	AS60–1762	SPACER, KNIFE
40	2	22650CK3	4–40 X 3/16 H.S.C.P.S.S.
41	1	AS60–1753	PLATE, LEFT CLOTH – CUTTER
42	2	22657C12	10–32 X 3/4 H.S.F.H.C.S.

From the library of: Diamond Needle Corp

From the library of: Diamond Needle Corp

2884K30B EFKA MOTOR ASSEMBLY

ITEM	OPER	QTY.	PART NO.	DESCRIPTION
1	010	1	28602AS28	N/PULLEY
2	010	1	2884Q8	ENCLOSURE ASM, QUAD PCB
3	010	3	40-50	N/WASHER
4	010	1	670E1204	CABLE ASM, QUAD PCB TO E
5	010	1	670E1244	CABLE,EFKA-220V
6	010	1	670E1245	CABLE,RELAY CONTROL
7	010	1	670E1246	CABLE, SYNCX4
8	010	1	670E986	CABLE, TREADLE OUTPUT IN
9	010	1	670H88A	EFKA US80A MOTOR
10	010	1	AS72-813	SPACER, MOTOR MOUNTING
11	010	3	RM2791-6	3/8-16 HEX NUT
12	010	3	RM2827-18	3/8-16 X 2 1/4 H.H.C.S.
13	010	2	RM3293-2	5/16 F.W.
14	010	3	RM3293-3	WASHER
15	010	2	RM3438-13	5/16-18 X 3 1/4 H.H.C.S.
16	010	1	RM3656-9	30" V-BELT 3/8 W. 3L
17	010	2	RM3993-5	5/16 H.S.L.W.
18	010	2	RM4514-1	5/16-18 X 3/4 H.S.FL.H.C
19	010	1	RM6426	RELAY, SSR 220V CRYDOM T
20	010	1	AS60-1642	PLATE, MOTOR MOUNTING
21	010	1	670E1550	JUMPER, RELAY,EFKA
22				
23				
24				
25				
26				
27				
28				
29				
30				
31				
32				
33				
34				
35				
36				
37				
38				
39				
40				
41				
42				
43				
44				
45				
46				
47				
48				
49				

From the library of: Diamond Needle Corp

PARENT NUMBER: 2884N4 DESCRIPTION: AS80/AS87/58B CONTROL DISPLAY

SEQ NO.	COMPONENT	QUANTITY PER	DESCRIPTION
040	22829B	4.	SCREW
040	AS87-1004	1.	PLATE, EMI
040	AS87-1011	1.	ENCLOSURE, DISPLAY
040	AS87-1013	1.	PANEL-DISPLAY
040	AS87-1043	1.	SPACER, DISPLAY
040	AS87-1049	1.	ADAPTER, D-SUB
040	RM2747-1	24.	ITLW - 4
040	RM2984A	2.	#4-40 X 1/8 H.S.H.C.S.
040	RM4451-4	4.	BHMS - 4-40 X 3/8
040	RM4451-5	20.	BHMS - 4-40 X 1/4
040	RM5040-15	2.	5/16 O.D.X.140 I.D. SPACER
040	RM5040-32	4.	STANDOFF-HEX - 4-40 - 3/8 LG.
040	RM5040-34	6.	STANDOFF-HEX - 4-40 - 5/8 LG.
040	RM5040-35	4.	STANDOFF-HEX - 4-40 - 3/4 LG.
040	RM5433-1	2.	HARDWARE-REAR MOUNTING
040	RM6251A	1.	PCB ASM, AS87 EMI TERM. CPU
040	RM6254	1.	KEYBOARD PCB ASS'Y.
040	RM6287	1.	ASS'Y SHARP LCD
040	RM6489	2.1	GASKET, EMI COPPER FINGERS

LOOSE PARTS:

090	2884N4	1.	AS80/AS87/58B CONTROL DISPLAY
090	670E834A	1.	CABLE CPU TERMINAL INTERFACE
090	AS87-1044	1.	BRACKET, DISPLAY
090	RM2719-2	4.	#10 X 2" P.H.S.M.S. (SLTD)
090	RM3293-6	2.	#10 F.W.
090	RM3993-3	2.	#10 H.S.L.W.
090	RM4671	1.	STAND, MOUNTING - DISPLAY

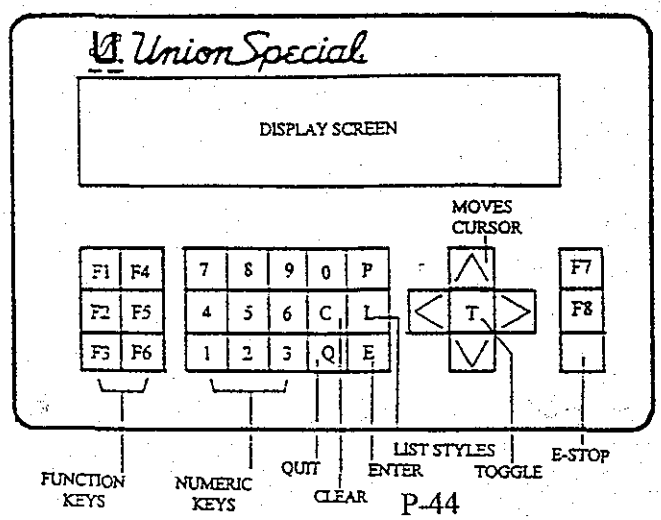

From the library of: Diamond Needle Corp

2884N4
CONTROL DISPLAY
(1 0F 2)

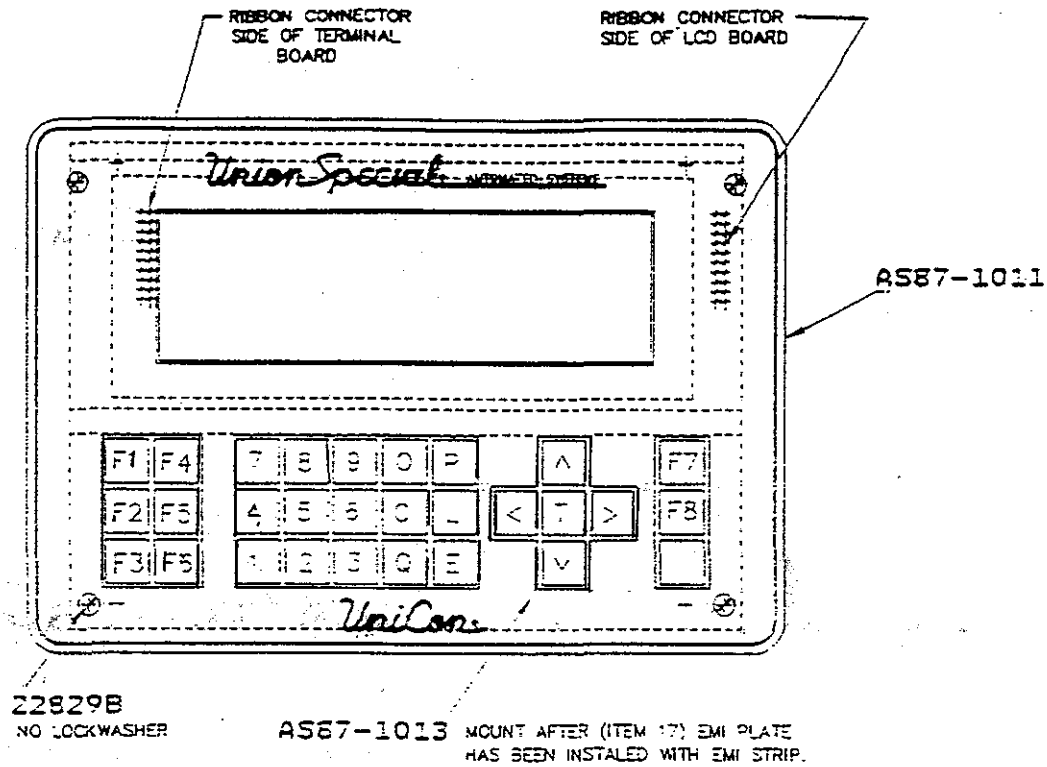

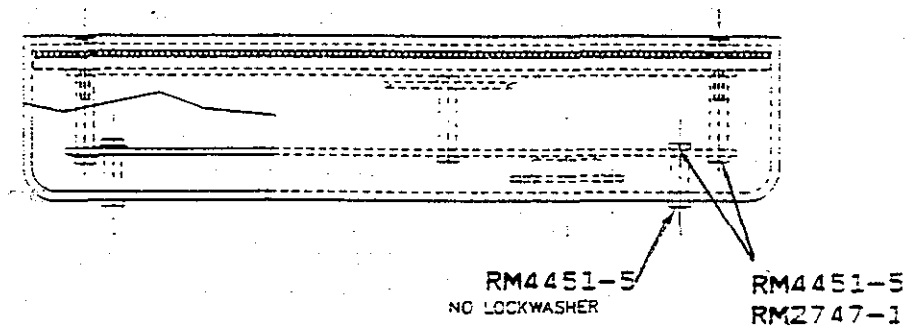

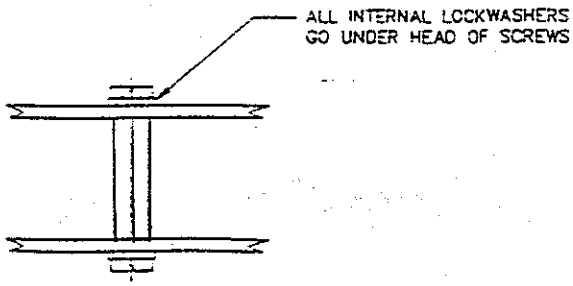

From the library of: Diamond Needle Corp

2884N4
CONTROL DISPLAY
(2 0F 2)

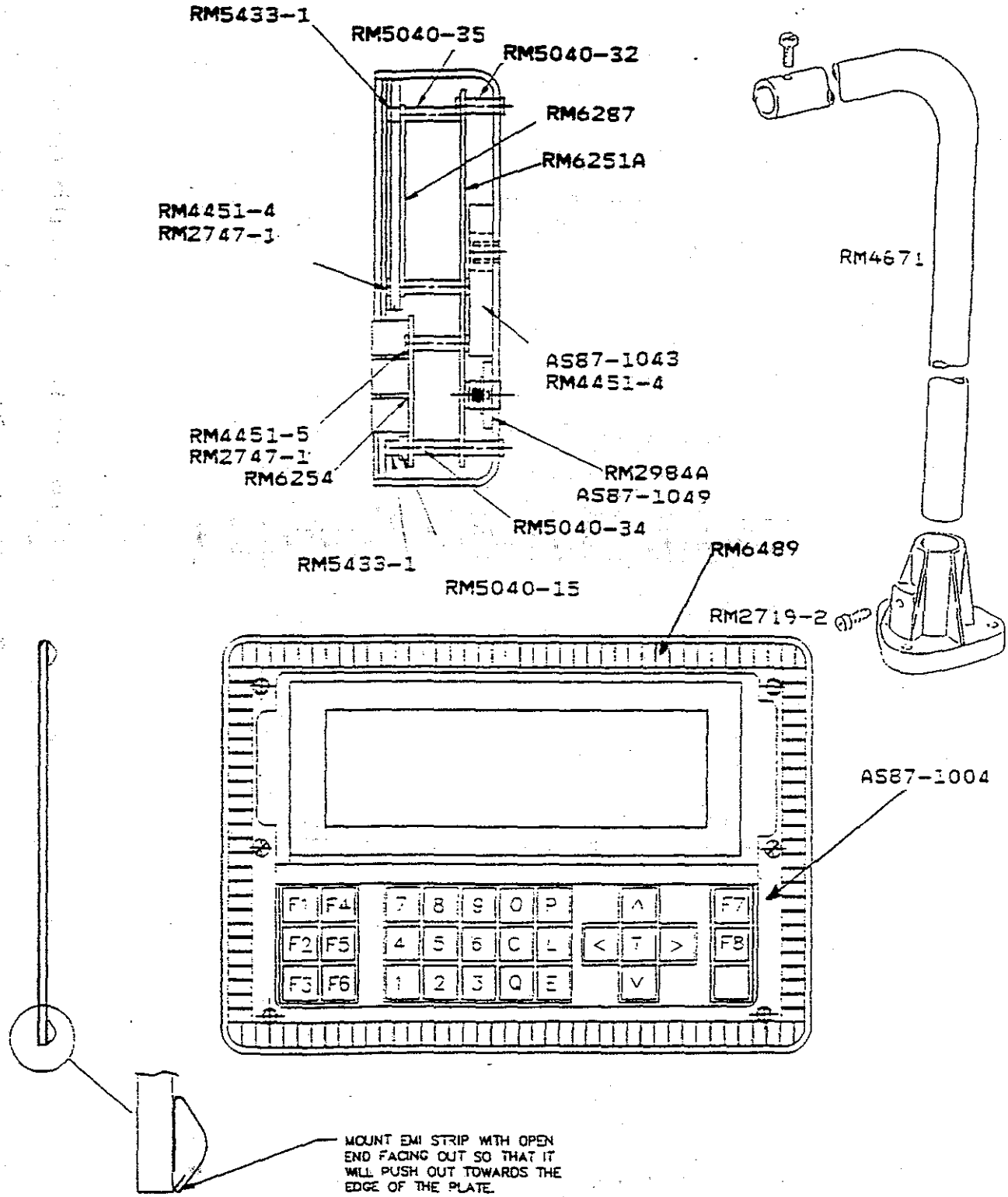

From the library of: Diamond Needle Corp

BELT TABLEBOARD ASSEMBLY
LOOSE PARTS
OPERATION 030

SEQ NO.	COMPONENT	QUANTITY PER	DESCRIPTION
030	AS60-213	1.	WIRE FORM - LEFT HAND
030	AS60-214	1.	WIRE FORM - RIGHT HAND
030	AS70-16	8.	BRACKET, BELT TABLE BOARD
030	AS72-107	6.	BRACKET, TABLE BOARD
030	AS72-150	2.	BKT., SUPPORT-LONG SPCL.
030	AS72-164	1.	EXTENSION, SENSOR BRACKET
030	AS72-18	1.	BRACKET, IDLER
030	AS72-37	1.	TABLEBOARD BELT
030	AS72-65	3.	BRACKET, HEMMER SENSOR
030	AS72-704	2.	DEFLECTOR, CONVEYOR BELT
030	AS72-718	1.	BLOCK, ROLLER MOUNTING
030	AS72-720	1.	PLATE, END - BLET TABLEBOARD
030	AS72-726	1.	STUD, IDLER
030	AS72-733	1.	ROLLER, IDLER-1.625OD.-813WD.
030	AS72-809	1.	BLOWER, LEADING EDGE, RIGHT
030	AS72-810	1.	BLOWER, LEADING EDGE, LEFT
030	AS72-90	2.	BLOCK, BLOWER MTG TALL
030	AS72-900	1.	PLATE, TABLEBOARD INSERT
030	AS72-93	4.	BRACKET, BEARING
030	RM2731A	9.	CABLE CLAMP
030	RM2791-1	1.	#8-32 HEX NUT
030	RM2791-3	21.	1/4-20 HEX NUT
030	RM2791-7	14.	#10-32 HEX NUT
030	RM2791-8	30.	5/16-18 HEX NUT
030	RM2813-1	9.	#8-32 X 1/4 BD.H.M.S.
030	RM3162-1	4.	1/4-20 X 5/8 H. H. C. S.
030	RM3162-14	4.	1/4-20 X 1 H.H.C.S.
030	RM3162-6	12.	1/4-20 X 1/2 H.H.C.S.
030	RM3239-1	4.	THRUST WASHER
030	RM3289-8	14.	SCREW, BHMS #10-32 X 1"L
030	RM3293-1	44.	1/4 F.W.
030	RM3293-2	40.	5/16 F.W.
030	RM3293-5	9.	#8 F.W.
030	RM3293-6	15.	#10 F.W.
030	RM3306-3	1.	#10-32 X 3/8 H.S.H.C.S.
030	RM3438-10	16.	5/16-18 X 2 1/2 H.H.C.S.
030	RM3438-2	4.	5/16-18 X 2 1/4 H.H.C.S.
030	RM3438-7	12.	5/16-18 X 1 H.H.C.S.
030	RM3993-3	15.	#10 H.S.L.W.
030	RM3993-4	7.	#8 H.S.L.W.
030	RM3993-5	28.	5/16 H.S.L.W.
030	RM3993-8	23.	1/4 H.S.L.W.
030	RM4485-1	8.	1/4-20 X 1 H.S.FL.H.C.S.
030	RM4623-1	6.	SLHCS - 1/4-20 X 1/2
030	RM4631-1	1.	WASHER, FENDER-1/4"

From the library of: Diamond Needle Corp

BELT TABLEBOARD ASSEMBLY
LOOSE PARTS
OPERATION 030
CONT'

030	22651CB4	2.	#10-32 X 1/4 H.S.C.P.S.S.
030	22652A10	2.	#8-32 X 5/8 H.S.H.C.S.
030	22652A16	3.	#8-32 X 1 H.S.H.C.S.
030	22652A20	1.	#8-32 X 1 1/4 H.S.H.C.S.
030	22652A6	5.	#8-32 X 3/8 H.S.H.C.S.
030	22652D12	2.	1/4-20 X 3/4 H.S.H.C.S.
030	22656D16	4.	1/4-20 X 1 H.S.F.H.C.S.
030	22658D12	1.	1/4-20 X 3/4 H.S. BUT. H.C.S.
030	660-442	4.	E RING 1/2 001C4
030	660-775E	1.	1/4-20 X 1 1/2 DUEL WELD NUT
030	660-857F	3.	KNOB PLASTIC KNURLED NO. 8
030	661-181A	4.	BEARING FLANGE - 3 OLT - 3/4
030	670B178	2.	SENSOR, PHOTO-ELECT.-18MM-STRT
030	670B188A	1.	SENSOR,PHOTO-670B178 W/EXT13"L
030	671F82H	1.	5/32 T X 1/4 T REDUCER
030	671F86B	1.	1/4 HOSE "Y" CONNECTOR
030	671F86E	2.	1/4 TUBE PUSH IN ELBOW
030	AS47-1182	1.	SLEEVE LOADING GUIDE
030	AS47-1184	3.	REFLECTIVE TAPE
030	AS47-229AU	16.	.33 X .87 X .09 LG. SPACER
030	AS47-976	1.	IDLER STUD
030	AS47-977	1.	ROLLER
030	AS58-2126	2.	TUBE-ROLLER BLOWER
030	AS60-212	2.	BLOCK, MTG. WIRE FORM

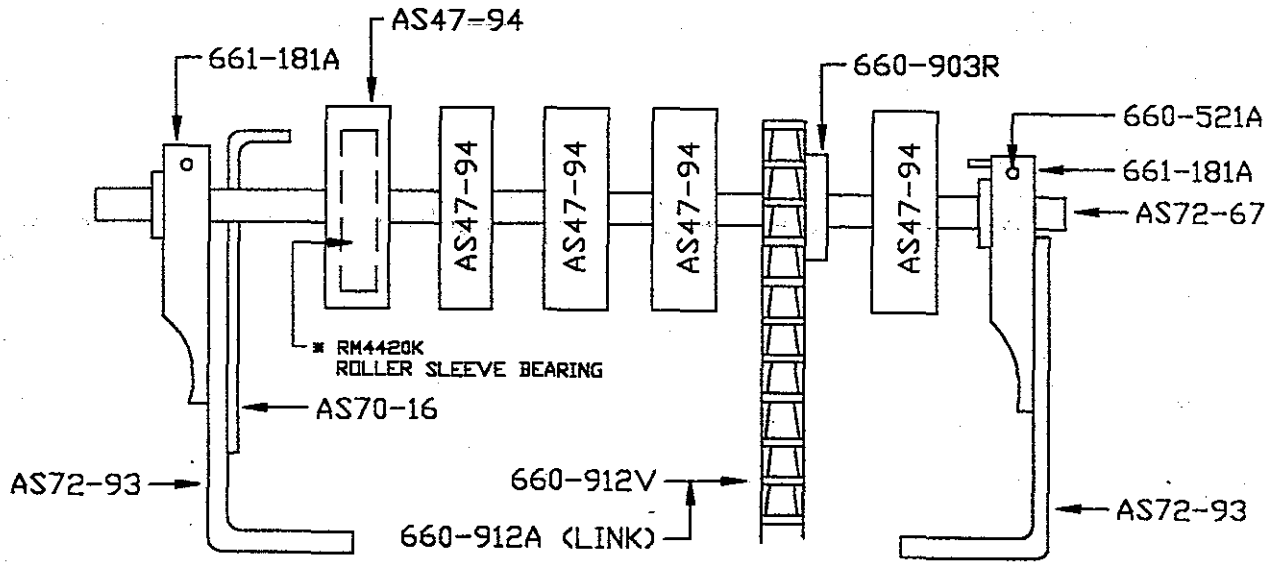

TAILSHAFT-RIGHT LOADING

From the library of: Diamond Needle Corp

BELT TABLEBOARD ASSEMBLY
LOOSE PARTS
OPERATION 030

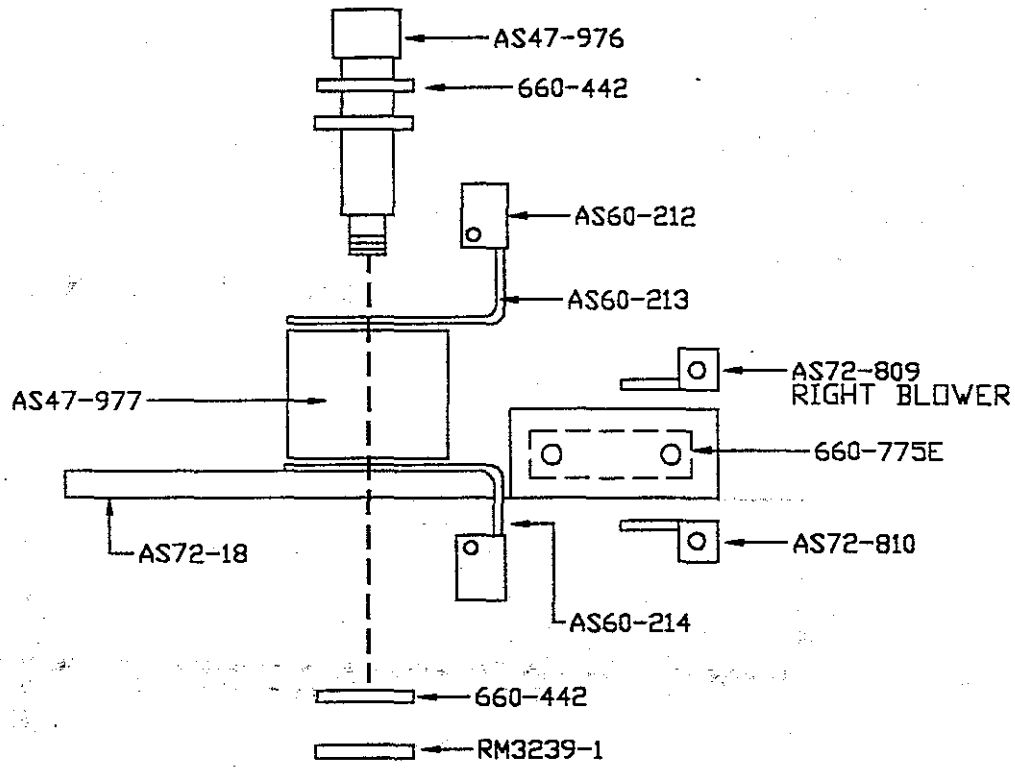

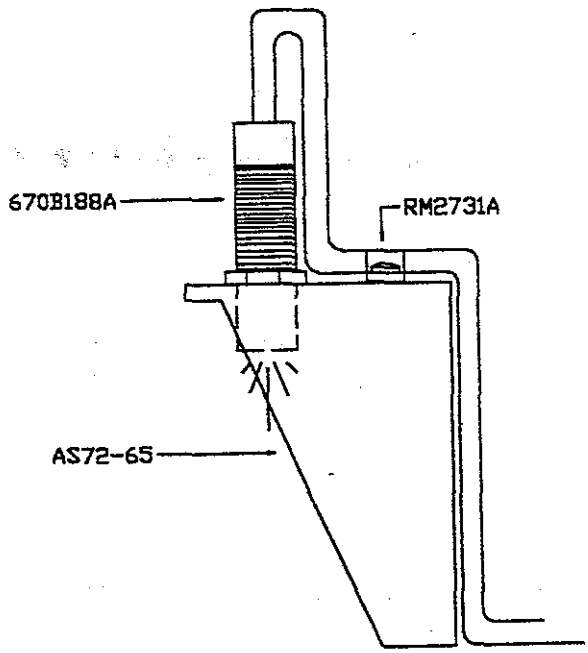

From the library of: Diamond Needle Corp

CONVEYOR DRIVE LOOSE PARTS
OPERATION 040

LOOSE PARTS:

040	22653B10	2.	#10-32 X 5/8" H.S.H.C.S.
040	22653B16	2.	#10-32 X 1 H.S.H.C.S. 556B1
040	670H153A	1.	MOTOR, STEPPER - 3A - W/CABLE
040	AS72-701	2.	PAD, ISODAMP - STEPPER MOTOR
040	AS72-702	1.	PLATE, NUT - STEPPER MOTOR
040	AS72-703	1.	BRACKET,MOUNTING-STEPPER MOTOR
040	AS72-734	1.	SPROCKET - NO.35 - 8T
040	RM3162-18	4.	1/4-20 X 2 3/4 H.H.C.S.
040	RM3293-1	4.	1/4 F.W.
040	RM3293-6	4.	#10 F.W.
040	RM3993-3	4.	#10 H.S.L.W.
040	RM3993-8	4.	1/4 H.S.L.W.

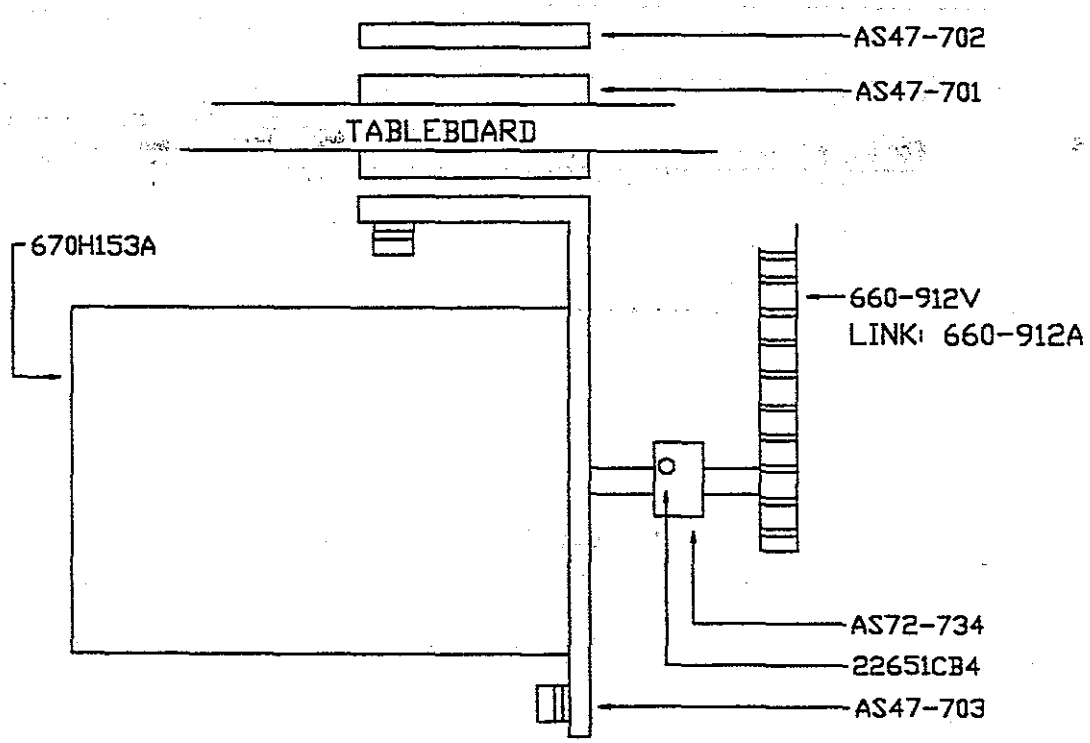

From the library of: Diamond Needle Corp

CONVEYOR LOOSE PARTS
OPERATION 070

070	660-903R	1.	SPROCKET NO 35 16 TEETH
070	660-912A	1.	CONNECTING LINK (#35 CHAIN)
070	660-912V	1.	CHAIN, ROLLER #35 74 PITCHES
070	661-185-1	3.	CONV. BELT STRETCH ENDLESS
070	661-185-11	1.	BELT, ENDLESS-.688WD. X 67LG.
070	661-185-2	1.	CONV BELT STRETCHENDLESS
070	661-186-1	1.	CONV BELT STRETCH PREP ENDS
070	661-186-2	2.	CONV BELT STRETCH PREP ENDS
070	AS72-20	3.	ROLL KNURLED .813 WD. 3 DIA
070	AS72-67	2.	SHAFT 3/4 DIA 17 3/16 LG
070	AS72-94	6.	ROLL-KNURLED 1.125 WD. 3 DIA
070	AS72-94-2	5.	ROLL PLASTIC 1.125 WD 3 DIA.

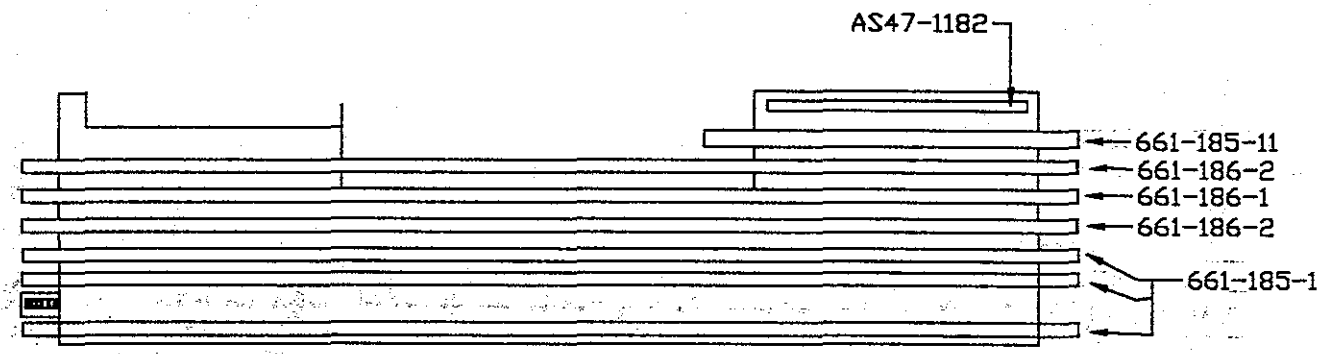

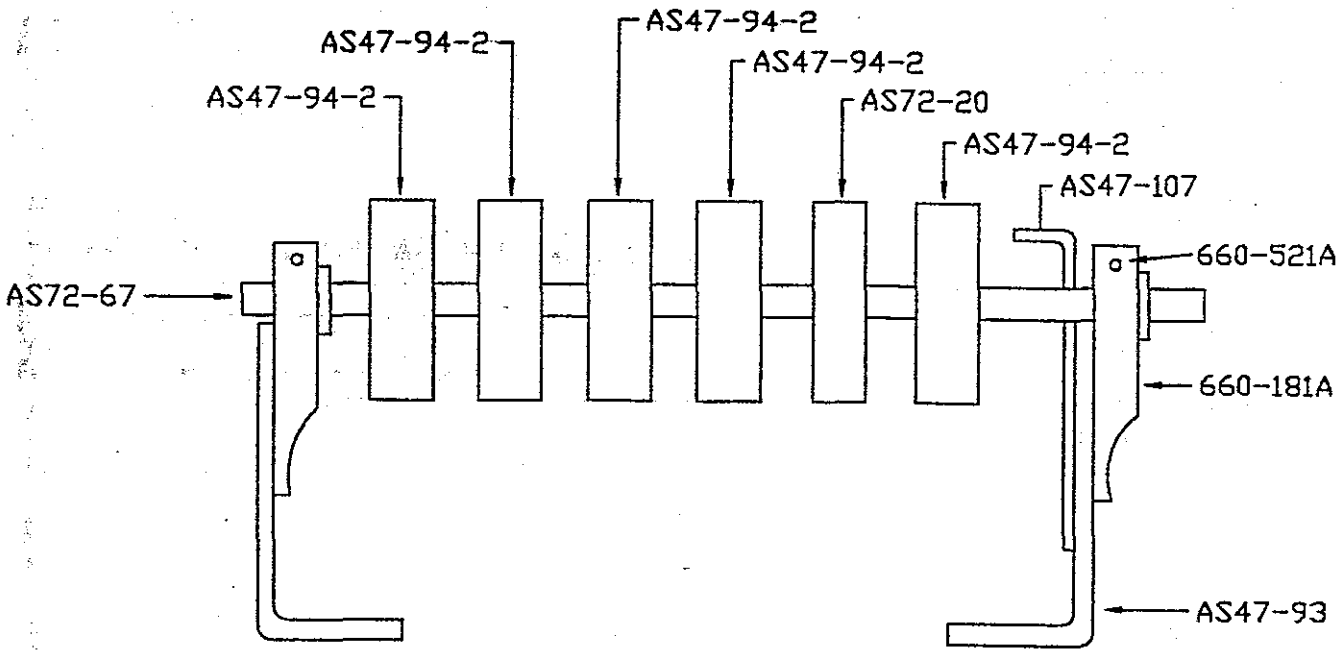

TAILSHAFT-LEFT LOADING

From the library of: Diamond Needle Corp

ELECTRICAL (LOOSE PARTS)
OPERATION 240

240	660-814B	1.	BUSHING
240	661-14C	1.	HOLE PLUG
240	670B142C	1.	SWITCH, E-STOP, MAINTAINED
240	670B81B	1.	SWITCH, PUSH BUTTON
240	670E1040B	1.	CBL,THREAD BRK-LOOPER PCB 43"L
240	670E1090A	1.	CABLE, E-STOP / RESET-EXT.
240	670E1144A	1.	CBL.ASM.EXPANDED 8-OUTPUT EXT.
240	670E834B	1.	CABLE ASM, CPU TERM INT. 10'
240	670E861E	2.	CABLE, GROUND-DOUBLE RING-30"
240	670E861H	1.	CABLE, GROUND-DOUBLE RING-48"
240	670E974A	1.	CABLE, 15 WIRE "D" RIBBON
240	670E974B	1.	CABLE, 15 WIRE
240	670E974H	1.	CBLE,I/O-15 COND.D RIBBON 18"L
240	670E974J	1.	CBL,I/O-15 COND.-D RIBBON-48"L
240	670E987C	1.	CABLE,STEPPER SIGNALS-EXT-42"L
240	670E987D	1.	CABLE,STEPPER SIGNALS-EXT-42"L
240	670E995B	1.	CABLE, RELAY CONTROL EXT.
240	670G58-1	1.	TERM. INS RING #10 14-16GA
240	670L70	1.	BOX, LOWER LOOPER T.B. VER 2
240	AS47-855	1.	PUSHBUTTON GUARD
240	AS72-735	1.	ENCLOSURE, E-STOP/RESET
240	AS72-877	1.	BRACKET, PC BOARD - INPUT
240	LA362	1.	LABEL, HIGHLIGHTER
240	LA391	1.	LABEL, E STOP BOX-SBH5A
240	LA395	1.	LABEL, INPUT BOARD-UPPER-SBH5A
240	LA407	1.	LABEL, INPUT BOARD-L.-LH-SBH5A
240	LA415	1.	LABEL, INPUT BOARD-L. RH-SBH5A
240	RM2719-1	4.	#10 X 1" P H S M S (SLTD) 5
240	RM2719-2	4.	#10 X 2" P.H.S.M.S. (SLTD)
240	RM2747-4	1.	ITLW - 10
240	RM2791-7	1.	#10-32 HEX NUT
240	RM3289-5	2.	SCREW, BHMS #10-32 X 3/8"L
240	RM3289-6	1.	SCREW, BHMS #10-32 X 1/2"L
240	RM3293-6	2.	#10 F.W.
240	RM3352A	2.	TERM. INS FORK #6 14-16GA
240	RM5170-5	1.	PUSH BUTTON SWITCH CAP, WHITE
240	RM6187-4	1.	LAMP, HOLOGEN-W/BASE-220VAC
240	RM6414	1.	ASM. P.C.B. UNICON 8-INPUT
240	RM6424B	1.	SNAPTRACK, PC BOARD MTG.
240	RM6573	1.	ROM, PROGRAMMED - SBH5C
240	RM6602	1.	PCB ASM, LOOPER T.B. VER 2
240	SC329A	2.	#10 X 1 R.H.W.S.

From the library of: Diamond Needle Corp

ELECTRICAL LOOSE PARTS
OPERATION 240

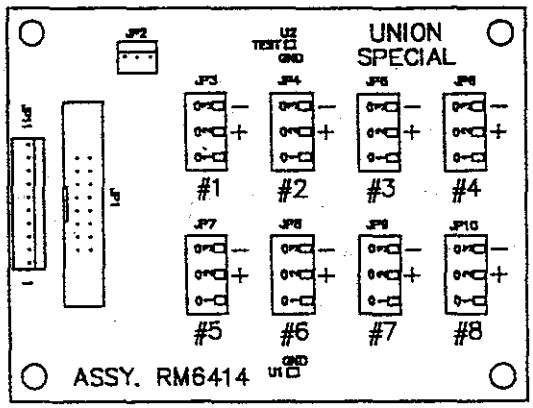

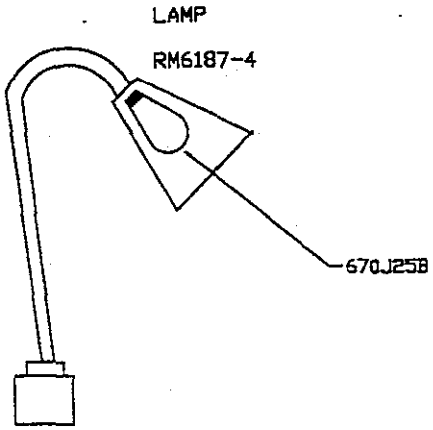

E-STOP / RESET BOX

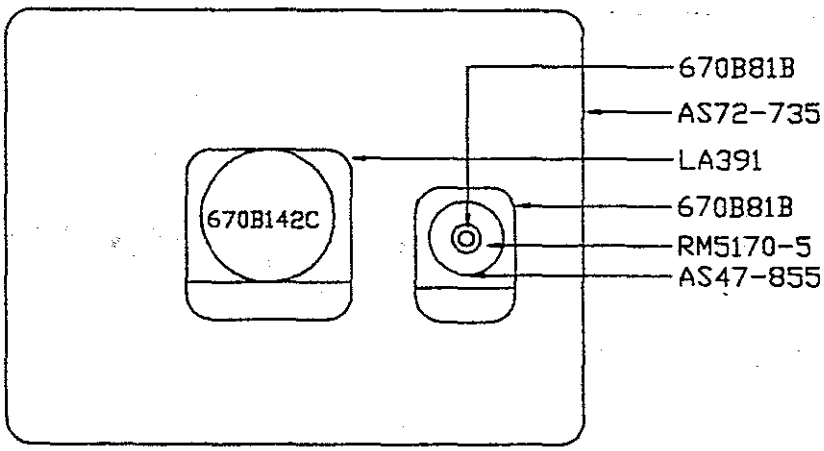

* For cable locations, see the electrical diagram located in the Technical Section of this catalog.

From the library of: Diamond Needle Corp

COVERS AND WASTE LOOSE PARTS
OPERATION 250

250	21101W3	1.	THREAD STAND
250	22652D6	4.	1/4-20 X 3/8 H.S.H.C.S.
250	22653B10	2.	#10-32 X 5/8" H.S.H.C.S.
250	22653B4	2.	#10-32 X 1/4 H.S.H.C.S.
250	660-431	2.	NYLON CAB CLAMP
250	666-197	4.	PINS 001J5
250	670E2	80.	CABLE TIE
250	671F81C	1.	FITTING, PUSH IN-1/4" TUBE
250	AS60-372	1.	ADAPTER, TEMPLEX 1"ID/1-1/2"OD
250	AS70-107	1.	COVER, LEFT CONVEYOR END
250	AS70-95	2.	BRACKET, CONVEYOR END COVER
250	AS72-102	1.	COVER, END TOP
250	AS72-149	1.	KIT - TEMPLEX VACUMN - SBH5
250	AS72-80	1.	COVER, LEFT CONVEYOR BELT
250	AS72-803	1.	GUARD, LOWER CHAIN
250	AS72-804	1.	GUARD, UPPER CHAIN
250	AS72-807	1.	GUARD, CHAIN, BELT TABLEBOARD
250	AS72-831	1.	GUARD, BELT - SEW HEAD
250	AS73-903-1	6.	10-32 HALF ROUND NUT
250	LA323	2.	COVER CAUTION LABEL
250	LA324	3.	COVER CAUTION LABEL
250	LA325	2.	VOLTAGE CAUTION LABEL
250	LA326	3.	COVER CAUTION LABEL
250	LA328	4.	KEEP HANDS FREE LABEL
250	LA336	1.	NAMEPLATE, MACHINE
250	LA350	1.	LABEL, HEMMER PANEL
250	LA383	1.	PLATE-AUTOMATED SYSTEM
250	LA391	1.	LABEL, E STOP BOX-SBH5A
250	LA396	1.	LABEL, SENSOR-TRIM KNIFE
250	LA411	1.	LABEL, SENSOR-L. LPR. T. BREAK
250	LA414	1.	LABEL, SENSOR-SEW
250	LA429	1.	LABEL - SENSOR - PICKER
250	LA430	1.	LABEL - SENSOR - DROPOFF
250	RM2719-3	3.	#10 X 11/2" P.H.S.M.S. (SLTD)
250	RM2785B	3.	HOSE, VACUUM
250	RM2787-1	2.	#12 X 1 PAN H.S.M.S.
250	RM2791-3	4.	1/4-20 HEX NUT
250	RM2791-7	2.	#10-32 HEX NUT
250	RM2813-3	1.	#8-32 X 3/8 BD.H.M.S.
250	RM3289-2	4.	#10-32 X 5/8 B.H.M.S.
250	RM3289-6	4.	10-32 X 1/2 B.H.M.S.
250	RM3293-1	8.	1/4 F.W.
250	RM3293-5	1.	#8 F.W.
250	RM3293-6	10.	#10 F.W.
250	RM3305-3	3.	CABLE-CLAMP, 3/4" DIA. #10
250	RM3993-3	7.	#10 H.S.L.W.
250	RM3993-4	1.	#8 H.S.L.W.
250	RM3993-8	8.	1/4 H.S.L.W.
250	RM4594-3	2.	SFHS 10-32X1
250	SC329A	2.	#10 X 1 R.H.W.S.

From the library of: Diamond Needle Corp

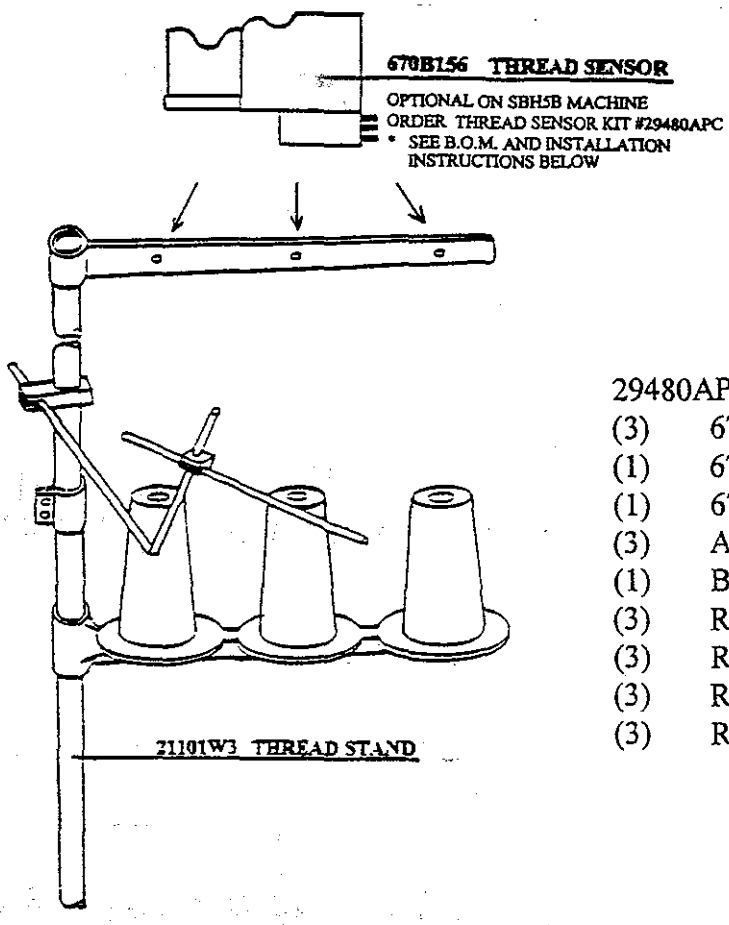

29480APC THREAD BREAK SENSOR KIT:

(3)	670B156	Thread Break Sensor
(1)	670E975B	Internal Cable
(1)	670E981B	External Cable
(3)	AS72-737	Thread Sensor Bracket
(1)	BA126	Jiffy Bags
(3)	RM2791-1	#8 - 32 Hex Nut
(3)	RM3293-5	#8 F.W.
(3)	RM3993-4	#8 H.S. Lockwasher
(3)	RM4412	8-32 x 3/8 H.S.C.S.

TO INSTALL THREAD BREAK SENSOR KIT:

Mount all three sensors with brackets on top of the upper thread stand arm and directly over the thread cones to be monitored. Install cable #670E981B with the black wires hooked-up to 0v on each sensor and the red wire hooked-up to +24V. Hook-up the appropriate green, white, or orange wire to the -CF position for each sensor as labeled.

Your may wish not to use the "looper" sensor if there is already one mounted in the sewing head. In this case simply unhook all 3 wires at this sensor and separate all 3 wires with electrical tape.

It will be necessary to install cable #670E981B between the wall of the Unicon control box and a circuit board inside the Unicon box. Locate an unused hole opening (there may also be an unused female pin plug) and mount the appropriate plug connection point on the Unicon circuit board. Label the outside of the Unicon box "upper thread sensor" to identify the new din plug and plug in the cable #670E981B.

Make sure the unit is programmed properly to use the new thread sensors. Locate the peripheral parameter #7 T_BRK LEVEL and make sure it is set to 1 = on (0 = off). It may be necessary to also increase the peripheral parameter #6 TB_DEBOUNCE to 30, 50, or 100. This debounce compensates for any loose thread on the thread stand at the beginning of sewing that may cause a false thread break message.

From the library of: Diamond Needle Corp

From the library of: Diamond Needle Corp

FS322H90-2C48 SEWING HEAD ASSEMBLY

From the library of: Diamond Needle Corp

From the library of: Diamond Needle Corp

OPER.	QTY.	PART NO.	DESCRIPTION
010	1	FS322H01-2C48	HEAD
010	1	AS60-1807	PRESSER FOOT
010	1	50643B	THROAT PLATE
010	1	C50056J	SCREW (for PF adjustment)
010	1	51430F	NUT (for PF adjustment)
010	1	AS60-1536	STAND PIPE
010	2	50392D	SPACER
010	2	22839E	**SCREW FOR AS60-385 CHANGE TO 99371B**
010	1	AS60-385	BASE, HEM GUIDE
010	1	AS60-88A	HANDLE
010	1	AS60-1630	TOP COVER
010	1	RM4316-17	SHOULDER SCREW
010	1	RM4437-1	SPRING WASHER
010	1	RM4436-1	PLASTIC WASHER
010	1	AS60-37	CLOTH PLATE, RIGHT
010	1	AS72-933	CLOTH PLATE, LEFT
010	1	AS60-1675	DIFFERENTIAL FEED DOG
010	1	AS72-937	CLOTH PLATE, RIGHT
010	1	AS60-1691	MAIN FEED DOG
010	1	AS60-1701	HEAD, NEEDLE - MODIFIED (12 GA.)
010	4	SS1121010SP	SCREW, .188-28 X .398 LG. FLAT HEAD
010	1	29480AXJ	PRESSER FOOT LIFT KIT
010	1	661-95	ELBOW FITTING
010	1	661-92	RED WASHER
010	1	R-50382CP	RETURNED 50382CP-FEED CHAMBER COVER
010	1	R-50382GB	RETURNED 50382GB-PULLER DRIVE COVER
010	1	R-50310BH	RETURNED 50301BH-CLOTH PLATE, LEFT
010	1	R-50382CK	RETURNED 50382CK-SWING DOWN COVER
010	1	R-50301BF	RETURNED 50301BF-CLOTH PLATE RIGHT
010	1	R-50324F48	RETURNED 50324F48-THROAT PLATE
010	1	R-50320T48	RETURNED 50320T48-PRESSER FOOT
010	1	R-50326AY	RETURNED 50326AY-DIFFERENTIAL FEED DOG
010	1	R-50305BM	RETURNED 50305BM-MAIN FEED DOG
010	1	R-50382FW	RETURNED 50382FW-TOP COVER
010	1	R-50382CJ	RETURNED 50382FW-REAR PULLEY COVER
010	1	R-50318AA48	RETURNED 50318AA48 - 12 GA. NEEDLE HEAD
010	4	R-18-1448	RETURNED SCREW .188-28 FLAT HEAD

From the library of: Diamond Needle Corp

From the library of: Diamond Needle Corp

FS322H90-2C56 HEMMER SEWING HEAD (5.6mm FS300) M. Smith 06/06/01

OPER.	QTY.	PART NO.	DESCRIPTION
010	1	FS322H90-2C48	Adjusted Sewing Head, 12 ga.
010	1	AS60-1739	Presser Foot Assembly, 6.4 mm
010	1	AS60-1808	Throat Plate, 5.6 mm
010	1	50318AD56	Needle Head, 5.6 mm
010	1-R	A10369A10	Presser Foot Assembly, 12 ga.
010	1-R	AS60-9	Throat Plate, 12 ga.
010	1-R	50318AG44	Needle Head, 12 ga.

From the library of: Diamond Needle Corp

From the library of: Diamond Needle Corp

OPER.	QTY.	PART NO.	DESCRIPTION
010	1	FS322H90-2C48	Adjusted Sewing Head, 12 ga.
010	1	AS60-1739	Presser Foot Assembly, 6.4 mm
010	1	AS60-1785	Throat Plate, 6.4 mm
010	1	50318AD64	Needle Head, 6.4 mm
010	1-R	A10369A10	Presser Foot Assembly, 12 ga.
010	1-R	AS60-9	Throat Plate, 12 ga.
010	1-R	50318AG44	Needle Head, 12 ga.

From the library of: Diamond Needle Corp

From the library of: Diamond Needle Corp

FS322H92 SEWING HEAD

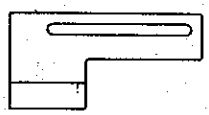

AS60-1733
CLOTH PLATE, RIGHT
RM4316-17 - SHOULDER SCREW
RM4437-1 - SPRING WASHER
RM4436-1 - PLASTIC WASHER

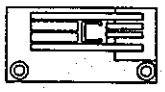

AS60-1784 - THROAT PLATE, 4.8MM
AS60-1808 - THROAT PLATE, 5.6MM
AS60-1785 - THROAT PLATE, 6.4MM
SCREW - 22524

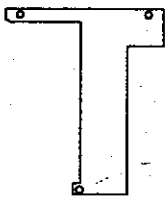

AS72-937
RIGHT CLOTH PLATE
"DRY CHAMBER COVER"
SCREW - 18-1448

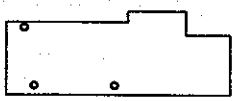

AS60-1753
CLOTH PLATE, LEFT
SCREW - 18-1448

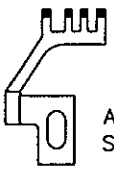

AS60-1675 - DIFFERENTIAL FEED DOG
SCREW - SS7091110TP

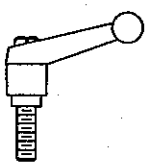

AS60-88A - HANDLE

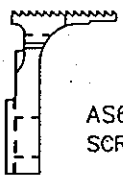

AS60-1691 - MAIN FEED DOG
SCREW - SS7091110TP

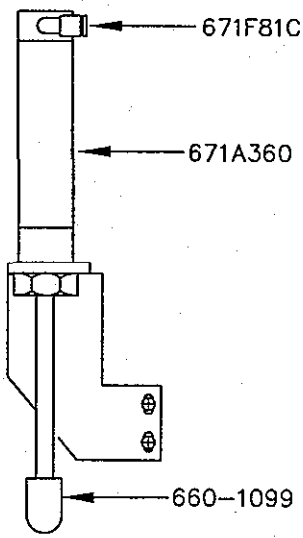

29480AXJ - PRESSER FOOT LIFT KIT

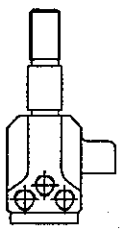

50318AA48 - NEEDLE HEAD, 4.8 MM.
50318AA56 - NEEDLE HEAD, 5.6 MM.
50318AA64 - NEEDLE HEAD, 6.4 MM.
SCREW - SS8080310TP

From the library of: Diamond Needle Corp

From the library of: Diamond Needle Corp

FS322H92 SEWING HEAD

AS60-1807 – PRESSER FOOT ASS'Y. – 4.8 MM
AS60-1739 – PRESSER FOOT ASS'Y. – 5.6 & 6.4 MM

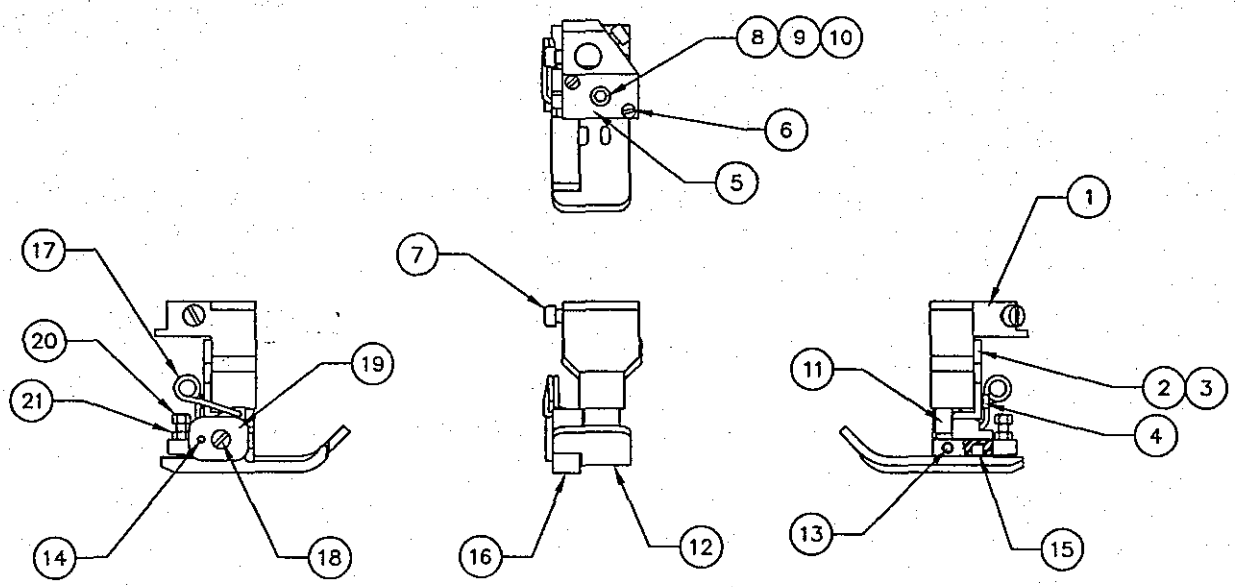

AS60-1807 – 4.8 MM

DET.	AM'T	DESCRIPTION	PART NO.
1	1	PRESSER FOOT SUPPORT	50330AU
2	1	PRESSER FOOT BRACKET	50330AX
3	2	SCREW	22738
4	1	SCREW	22738G
5	1	PRESSER FOOT COVER	50330AW
6	2	C'SINK SCREW	99316
7	2	SCREW	77
8	1	TENSION SCREW	99371C
9	1	PRESSER FOOT SPRING	50330AG
10	1	NUT	50330R
11	1	SPRING HOLDER	A10369AC
12	1	PRESSER FOOT BOTTOM	AS60-1806
13	1	PIN	50330BC
14	1	PIN	50330BB
15	1	SPRING, COMPRESSION	39568J
16	1	YIELDING SECTION	AS60-1809
17	1	PRESSER FOOT SPRING	50330AZ
18	1	SCREW	22716
19	1	PLATE	G57730GC
20	1	SCREW	99339B
21	1	NUT	35875V

AS60-1739 – 5.6 & 6.4 MM

DET.	AM'T	DESCRIPTION	PART NO.
1	1	PRESSER FOOT SUPPORT	50330AU
2	1	PRESSER FOOT BRACKET	50330AX
3	2	SCREW	22738
4	1	SCREW	22738G
5	1	PRESSER FOOT COVER	50330AW
6	2	C'SINK SCREW	99316
7	2	SCREW	77
8	1	TENSION SCREW	99371C
9	1	PRESSER FOOT SPRING	50330AG
10	1	NUT	50330R
11	1	SPRING HOLDER	A10369AC
12	1	PRESSER FOOT BOTTOM	AS60-1738
13	1	PIN	50330BC
14	1	PIN	50330BB
15	1	SPRING, COMPRESSION	39568J
16	1	YIELDING SECTION	AS60-1493
17	1	PRESSER FOOT SPRING	50330AZ
18	1	SCREW	22716
19	1	PLATE	G57730GC
20	1	SCREW	99339B
21	1	NUT	35875V

From the library of: Diamond Needle Corp

From the library of: Diamond Needle Corp

PL 1241-4

SBH Constant Numbers Version #001.004 Jan. 5, 1993 12:37

Number	Factory preset		Description
1	96		*** Stacker counter bundle size.
2	0		*** 0 = Blade enabled, 1 = Blade disabled.
3	1785	hem counts	*** Trim-to-hemmer sensor distance (should be set exactly).
4	2425	hem counts	*** Hemmer-to-div2 sensor distance (should be set exactly).
5	1975	hem counts	*** Div2-to-stacker sensor distance (should be set exactly).
6	100	hem counts*	*** Folder jam timer safety margin.
7	100	hem counts*	*** Hem leading and trailing edge roll-up jam timer safety margin.
8	400	hem counts	*** Minimum sleeve length to be recognized by trim knife sensor.
9	5000	milliseconds	*** Delay before oil pressure check.
10	150	milliseconds	Oil flow switches debounce timer (shut-down if oil flow fails this lon
11	500	milliseconds	Hemmer belts on delay (to allow trim motor time to start).
12	500	milliseconds	Trim knife motor off delay (after belts stop).
13	674		*** Folder metering ratio (256 = 1.0) (512 = 2.0).
14	3500	milliseconds	*** Auto-shutdown timer.
15	1500	hem counts*	*** Hemmer sew head run speed on delay.
16	0	hem counts	*** Trim blowers on delay.
17	450	hem counts	*** Trim blowers off delay.
18	50	hem counts*	*** Hemmer venturi on before head on leading edge.
19	0	hem counts	*** Hemmer templex valve on delay.
20	400	hem counts	*** Hemmer templex valve off delay.
21	250	hem counts	*** Extra foot pressure off delay on leading edge.
22	225	hem counts	*** Stitch length change on delay on leading edge.
23	300	hem counts	*** Hemmer chain cutters on delay on leading edge.
24	225	hem counts	*** Hemmer tension change on delay on leading edge.
25	350	hem counts	*** Hemmer venturi off delay on leading edge.
26	600	milliseconds	*** Third belt blower on delay
7	600	milliseconds	*** Third belt blower off delay
28	350	hem counts	*** Hemmer chain cutters on delay on on trailing edge.
29	180	hem counts	*** Extra foot pressure on delay on trailing edge.
30	180	hem counts	*** Stitch length change off delay on trailing edge.
31	180	hem counts	*** Hemmer tension change off delay on trailing edge.
32	525	hem counts	*** Hemmer sew head slow down delay.
33	0	hem counts	*** Hemmer sew head stop delay.
34	275	hem counts	*** Hemmer venturi on delay on trailing edge.
35	100	milliseconds	*** Hemmer venturi off delay after head stops.
36	225	hem counts	*** Sleeve pickup on delay.
37	200	milliseconds	Pick-up blade on duration.
38	15	milliseconds	Ply separation blower on delay.
39	0	milliseconds	Ply separation blower OFF delay.
40	0	milliseconds	*** Pickup jaw blower on delay.
41	0	milliseconds	*** Pickup jaw blower off delay.
42	75	hem counts	*** Dropoff on delay.
43	75	milliseconds	Dropoff on duration.
44	600	hem counts	*** Leading edge uncurl blower on delay.
45	50	milliseconds	*** Leading edge uncurl blower on duration.
46	1000	milliseconds	*** Stacker flapper on delay.
47	500	milliseconds	*** Stacker flapper on duration.
48	750	milliseconds	*** Stacker tray duration.
49	9		Manual hem sew/chain speed.
52	500	milliseconds	Short beep to announce machine ready to run (wait for GO LED to turn c

From the library of: Diamond Needle Corp

From the library of: Diamond Needle Corp

SBH Constant Numbers Version #001.004 Jan. 5, 1993 12:37

Number	Factory preset		Description
54	100	milliseconds	Free-running timer, for status checks.
60	0	milliseconds*	Auto-run inputs debounce loop.
67	10	milliseconds	Give 'clear_errors' time to do it's thing. Prevents erasure of sensor
68	1	milliseconds	Give 'sensor_check' time to complete.
72	0	milliseconds*	Manual-run inputs debounce loop.
76	1	milliseconds	Manual run switch on.
77	1	milliseconds	Manual run switch on.
93	1000	milliseconds	Re-enable the goled. This causes a short blink during normal shutdowns
95	5000	milliseconds*	Delay after jams, before restart allowed. Causes long blinks during es
111	5	milliseconds	Oil flow switch debounce loop.
113	5	milliseconds	Debounce loop delay for pushbutton switches.
114	50		Debounce timer for pushbutton switches.
119	500	milliseconds	Oil pressure acknowledge waiting.
133	100	hem counts*	Safety margin for trim sensor sleeve length check.
150	0	hem counts*	Hem trailing edge roll-up jam timer.
164	200	hem counts	Hemmer chain knife pulses on duration.
187	100	milliseconds	Start the error checking system (delay allows 'pwr' functs to finish).
197	200	milliseconds	Hemmer chain knife pulses on duration (manual).
200	2000	milliseconds*	On duration for single long beep.
202	100	milliseconds	Long monitor screen peep.
204	50	milliseconds	Short monitor screen peep.
210	100	milliseconds	Feeder out pulse duration.
215	0	milliseconds*	Manual hem chain cut debounce loop.
221	0	milliseconds*	Manual hem chain switch debounce loop.
226	250	milliseconds	Manual hem chain start delay (if foot is up).
231	0	milliseconds*	Manual hem sew switch debounce loop.
4	250	milliseconds	Manual sew head on delay.
239	2000		Cycle-mode sleeve hem spacing.
240	1400		Cycle-mode sleeve hem length.
244	0	hem counts*	Trim sensor sleeve spacing.
245	0	hem counts*	Trim sensor sleeve length.
246	0	hem counts*	Hemmer sensor sleeve length.
248	0	hem counts*	Div2 sensor sleeve length.
250	0	hem counts*	Drive stacker sensor high.

From the library of: Diamond Needle Corp

From the library of: Diamond Needle Corp

SBH coil numbers, version #1.004 January 5, 1993

Number	Description
1	Hemmer waste removal.
2	Divide by two blade.
3	Signal to dropoff solenoid box.
4	Third belt blower.
5	Pickup jaw blower.
7	Output to stop auto loader.
9	Hemmer stitch length.
10	Hem presser foot.
11	Hemmer extra foot pressure.
12	Hemmer tension change.
14	Hemmer chain knife (valve-B).
15	Hemmer chain knife (valve-A).
16	Material trim knife motor.
17	Stacker flapper.
18	Hemmer venturi.
19	Trim knife blower.
20	Leading edge uncurl blower
21	Ply separation blower
22	Stacker tray.
25	"GO" indicator.
26	Thread break indicator.
27	Jam indicator.
28	Unused
29	Oil-flow indicator.
30	Alarm.
	Oil pump motor.
	Hemmer conveyor motor.

From the library of: Diamond Needle Corp

From the library of: Diamond Needle Corp

SBH coil numbers, version #1.004 January 5, 1993

Number	Description
101	Debounce timer for hemmer manual cut switch.
102	Debounce timer for hemmer manual sew switches.
103	Debounce timer for oil flow switches.
104	Debounce timer for auto-run switch.
105	Debounce flag for manual hem cut switch.
106	Debounce flag for manual hem sew switches.
107	Debounce flag for oil flow switch.
108	Debounce flag for all run inputs.
109	Hemmer sensors edge detect counter.
110	Automatic run mode is active.
111	Set when cycle mode is actually running.
112	Set when sensors uncovered test succeeds.
113	Set to disable 'GO' while shutting down.
114	Set during emergency shutdowns, prevents loader restart.
115	Prevents double estops.
116	Set while trim sensor lint check is in progress.
117	Set while hem sensor lint check is in progress.
118	Set while waiting for oil flow to resume.
119	Count sleeves entering hemmer (>1 keeps head running between close sleeves).
120	Track hem head functions, so they can be restarted.
121	Hemmer chain knife valve select (hi=A, low=B, 1=reset).
152	*** Hemmer jam timer disable, set to high (will reset to low on power down).
153	*** Oil pressure reset, set to low.
154	Direction flag for plc counter 1.
155	Direction flag for plc counter 2.
6	Direction flag for plc counter 3.
7	Direction flag for plc counter 4.
158	Sensor enable coil.
159	Unused power-down coil.
160	*** SBH6-set high. SBH5-set low.
161	Oil pressure error detected.
162	Batch counter.
163	Request batch counter reset.
164	Set from panel when cycle mode enabled.

From the library of: Diamond Needle Corp

From the library of: Diamond Needle Corp

SBH coil numbers, version #1.004 January 5, 1993

Number	Description
201	Front panel conveyor start switch.
202	Trim knife sensor.
203	Hemmer sew sensor.
204	Divide by two sensor.
205	Stacker sensor.
206	Oil flow sensor.
208	Output from auto loader to start hemmer.
209	Hemmer presser foot lift switch.
210	Manual hemmer sew switch.
211	Manual hemmer chain switch.
212	Hemmer chain cutter switch.
213	Manual run switch (hemmer ctl panel).
229	Hemmer motor needle-up signal.
230	Hem thread break sensor (electronic).

From the library of: Diamond Needle Corp

From the library of: Diamond Needle Corp

FS300 CLASS SEWING HEAD CATALOG# PT9800

* Refer to FS322H90-2C48 ONLY for machine style 2800SBH9C

From the library of: Diamond Needle Corp

From the library of: Diamond Needle Corp